Electric Actuator

Slider Type

New

Easy setting

Data can be set with only 2 items: position and speed.

Data	Axis 1
Step No.	0
Posn	150.00 mm
Speed	200 mm/s

Teaching box screen

Compact

Height and Width: Reduced by approx. 50%

* In comparison with SMC LJ1 series (Work load: 10 kg)

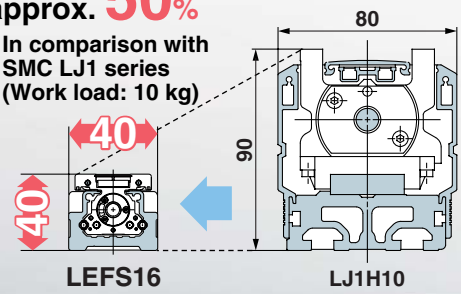

Easy mounting of the body/Reduction of the installation time

Possible to mount the main body without removing the external cover, etc.

Equipped with seal band as standard

Covers the guide, ball screw and belt. Prevents grease from splashing and external foreign matter from entering.

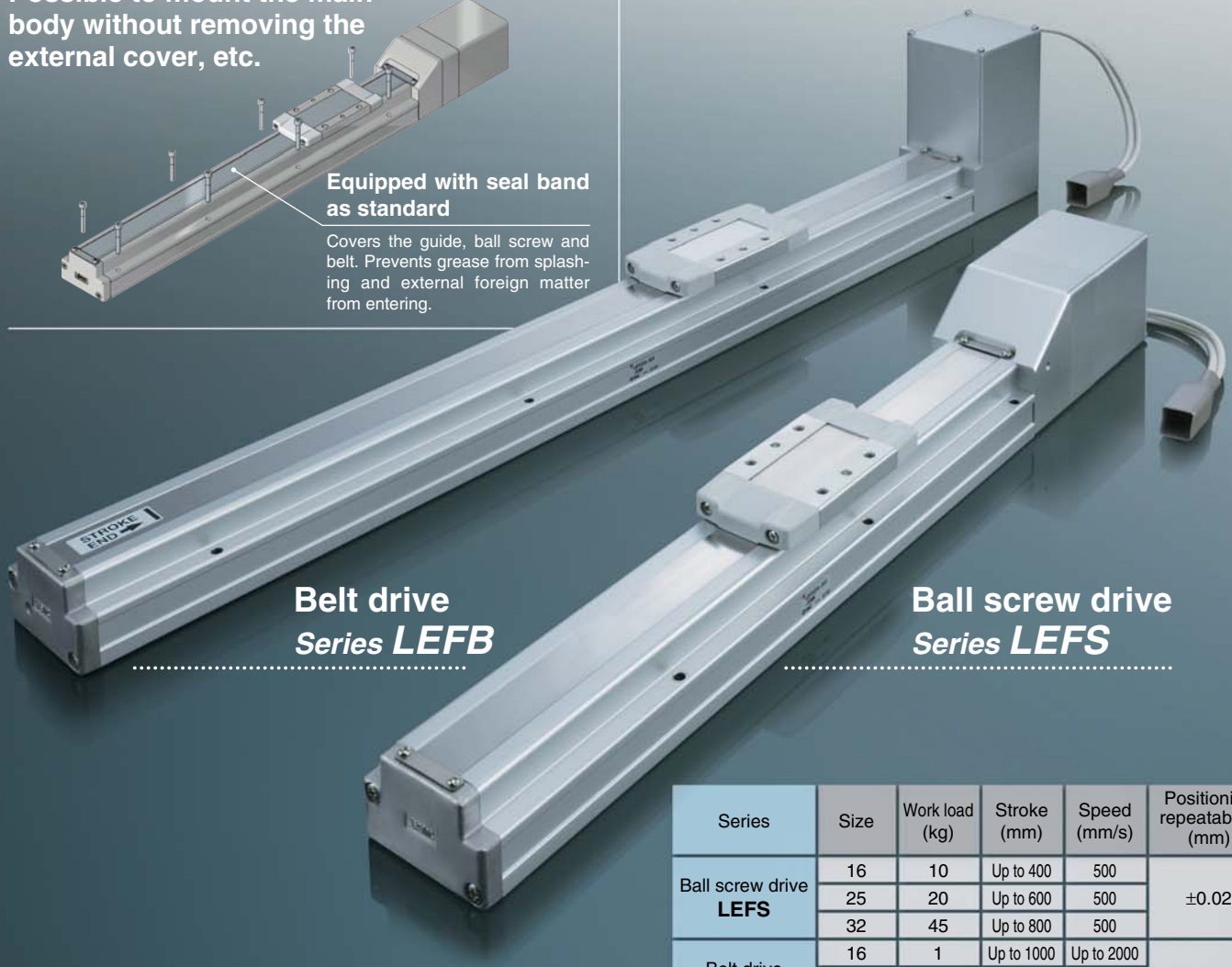

Belt drive
Series LEFB

Ball screw drive
Series LEFS

Series	Size	Work load (kg)	Stroke (mm)	Speed (mm/s)	Positioning repeatability (mm)
Ball screw drive **LEFS**	16	10	Up to 400	500	±0.02
	25	20	Up to 600	500	
	32	45	Up to 800	500	
Belt drive **LEFB**	16	1	Up to 1000	Up to 2000	±0.1
	25	5	Up to 2000	Up to 2000	
	32	14	Up to 2000	Up to 1500	

* The size corresponds to the bore of the air cylinder with an equivalent thrust. (For the operation using ball screws)

Series LEF

SMC

CAT.ES100-87A

Drive methods can be selected.

Ball Screw Drive/*Series LEFS*

Max. work load: **45** kg
Positioning repeatability: **±0.02** mm

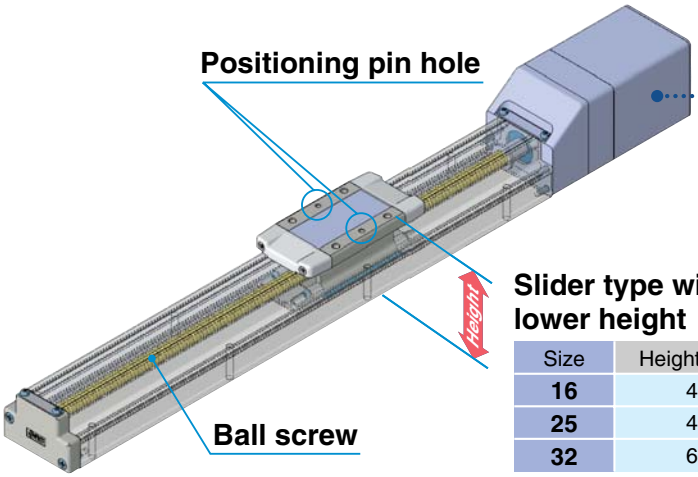

Slider type with lower height

Size	Height (mm)
16	40
25	48
32	60

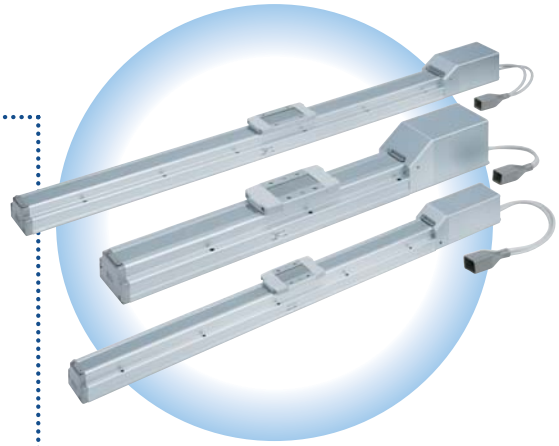

Non-energizing operation type lock mechanism
(Option)

Drop prevention in case of power failure

Belt Drive/*Series LEFB*

Max. stroke: **2000** mm
Transfer speed: **2000** mm/s

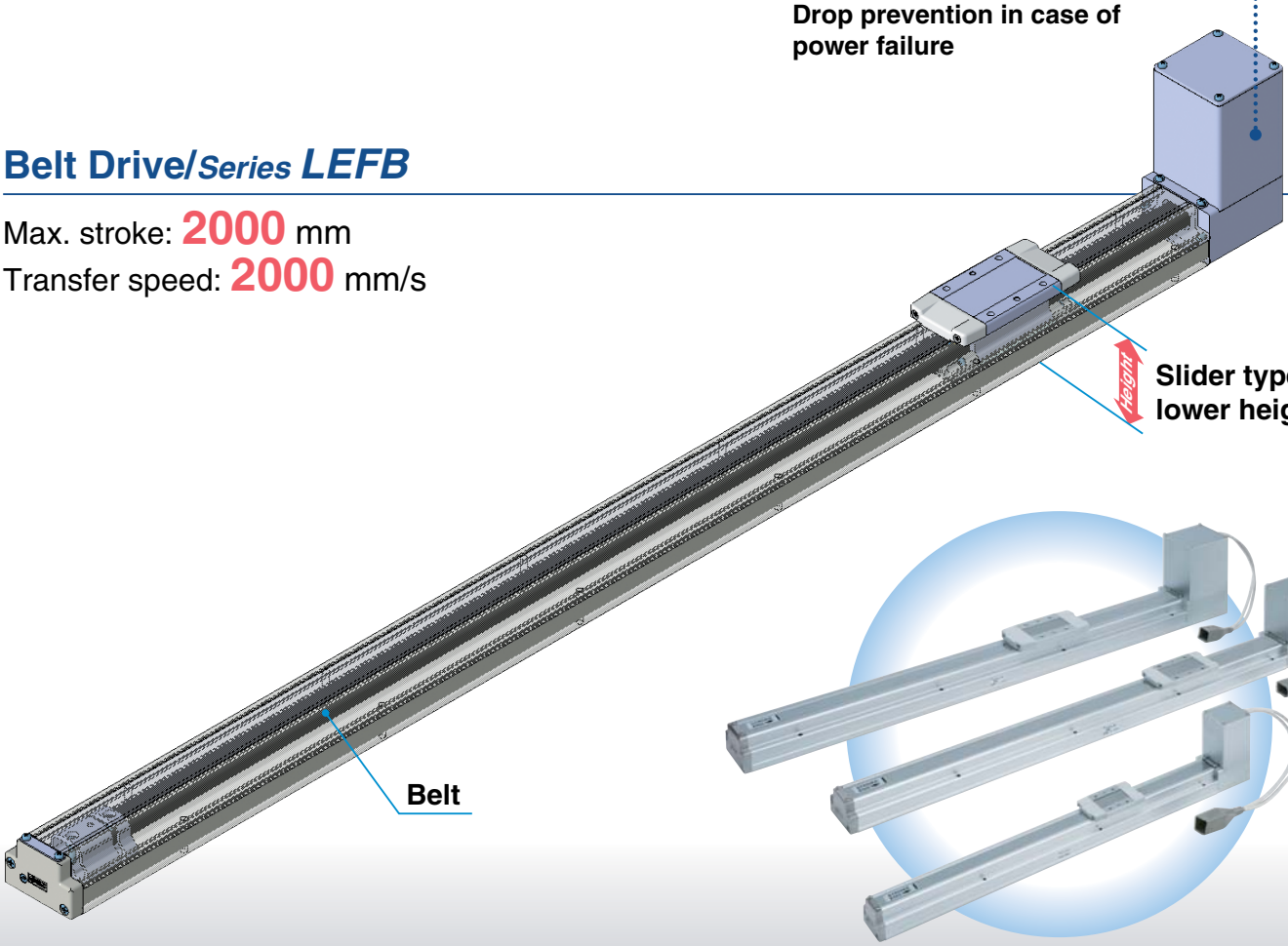

Slider type with lower height

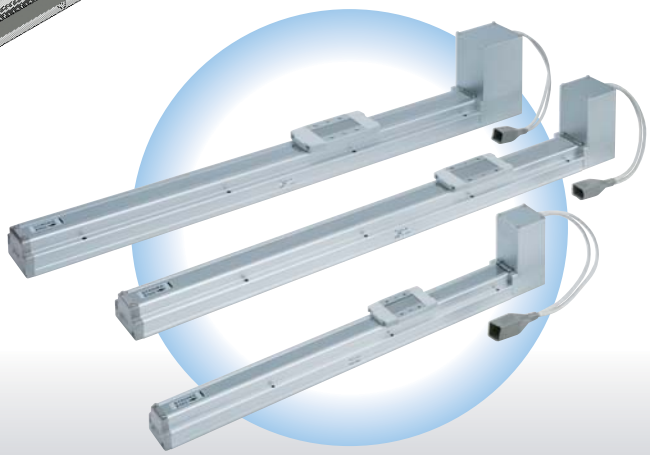

2 Types of Motors

- **Step Motor (Servo/24 VDC)**
  Ideal for transfer of high load at a low speed
- **Servo Motor (24 VDC)**
  Stable at a high speed and silent operation

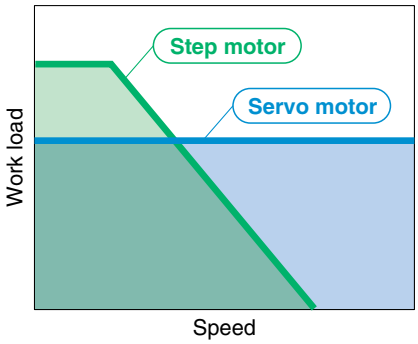

Application Examples

Precise positioning of work pieces

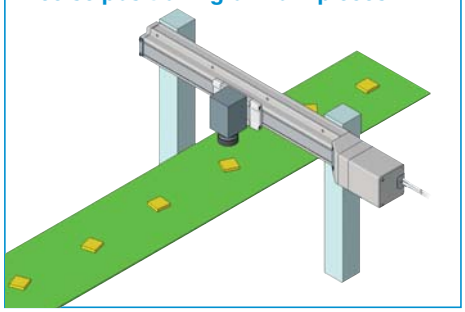

Load and unload transfer of work pieces

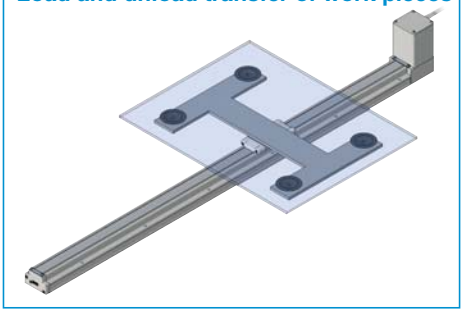

Pick and place

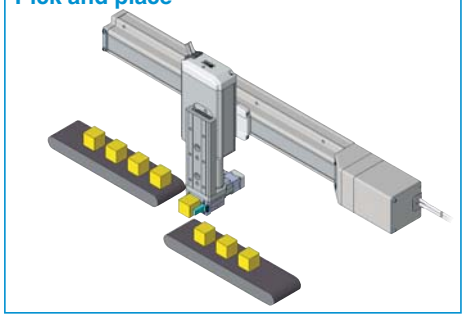

Vertical transfer

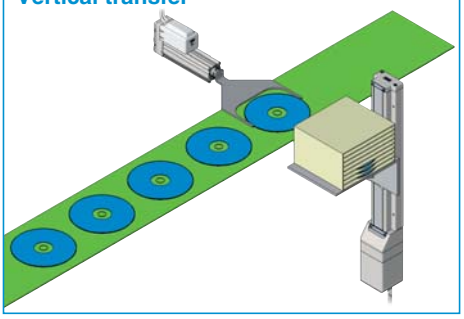

Series Variations

Ball Screw Drive/Series LEFS

Type	Size *1	Lead (mm)	Stroke (mm) *2	Work load: Horizontal (kg) 10 20 30 40 50	Work load: Vertical (kg) 10 20	Speed (mm/s) 200 400 600 800
Step motor (Servo/24 VDC)	16	5	100, 200, 300, (400)			
		10				
	25	6	100, 200, 300, (400) 500, (600)			
		12				
	32	8	100, 200, 300, (400) 500, (600), (700), (800)			
		16				
Servo motor (24 VDC)	16	5	100, 200, 300, (400)			
		10				
	25	6	100, 200, 300, (400) 500, (600)			
		12				

*1 The size corresponds to the bore of the air cylinder with an equivalent thrust. (For the operation using ball screws)
*2 Strokes shown in ( ) are produced upon receipt of order. Strokes other than those mentioned above are available as a special.

Belt Drive/Series LEFB

Type	Size *1	Equivalent lead (mm)	Stroke (mm) *2	Work load: Horizontal (kg) *3 5 10 15 20	Speed (mm/s) 500 1000 1500 2000
Step motor (Servo/24 VDC)	16	48	(300), 500, (600), (700) 800, (900), 1000		
	25	48	(300), 500, (600), (700), 800, (900) 1000, (1200), (1500), (1800), (2000)		
	32	48	(300), 500, (600), (700), 800, (900) 1000, (1200), (1500), (1800), (2000)		
Servo motor (24 VDC)	16	48	(300), 500, (600), (700) 800, (900), 1000		
	25	48	(300), 500, (600), (700), 800, (900) 1000, (1200), (1500), (1800), (2000)		

*1 The size corresponds to the bore of the air cylinder with an equivalent thrust. (For the operation using ball screws)
*2 Strokes shown in ( ) are produced upon receipt of order. Strokes other than those mentioned above are available as a special.
*3 Belt drive actuator cannot be used for vertically mounted applications.

Simple Setting to Use Straight Away
Start-up Time Shortened

■ The controller is already set with the data of the actuator.

Refer to page 20 for details of the controller.

Initial parameters are already set when the controller is shipped.
Possible to start up the controller in a short time with easy mode.

The initial parameters are already set, so the actuator and controller are available as a set. (They can be ordered separately.)

Confirm that the combination of the controller and the actuator is compatible.

<Be sure to check the following before use.>

① Check that actuator label for model number. This matches the controller.
② Check Parallel I/O configuration matches (NPN or PNP).

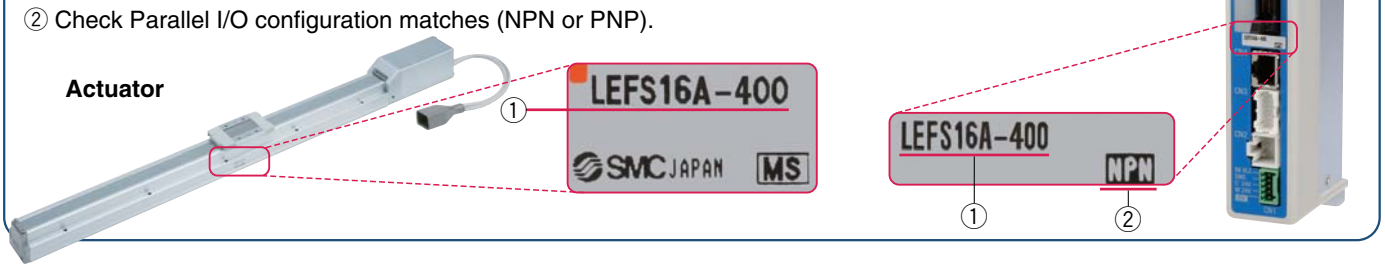

Simple Setting Easy Mode

If you want to use it right away, select "Easy Mode."

<When using a Teaching Box>

- The simple screen without scrolling promotes ease of setting and operating.
- Pick up an icon from the first screen and select a function.
- Set up the step data and check the monitor on the second screen.

Example of setting the step data

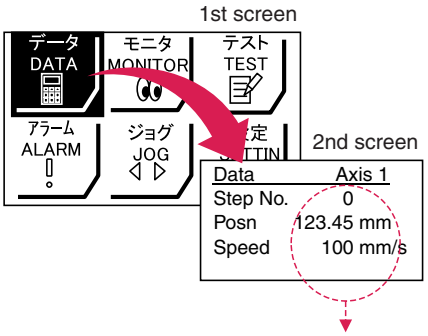

It can be registered by "SET" after entering the values.

Example of checking the monitor

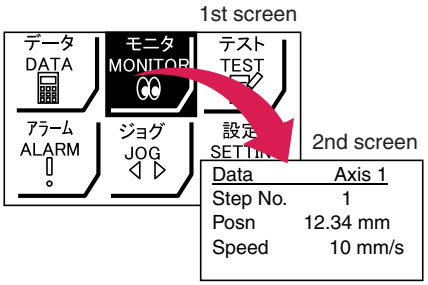

Operation status can be checked.

Teaching box screen

- Data can be set with position and speed.
  (Other conditions are already set.)

Data	Axis 1
Step No.	0
Posn	50.00 mm
Speed	500 mm/s

→

Data	Axis 1
Step No.	1
Posn	80.00 mm
Speed	300 mm/s

<When using a PC>
Controller setting software

- Step data setting, test operation, move jog and move for the constant rate can be set and operated on one screen.

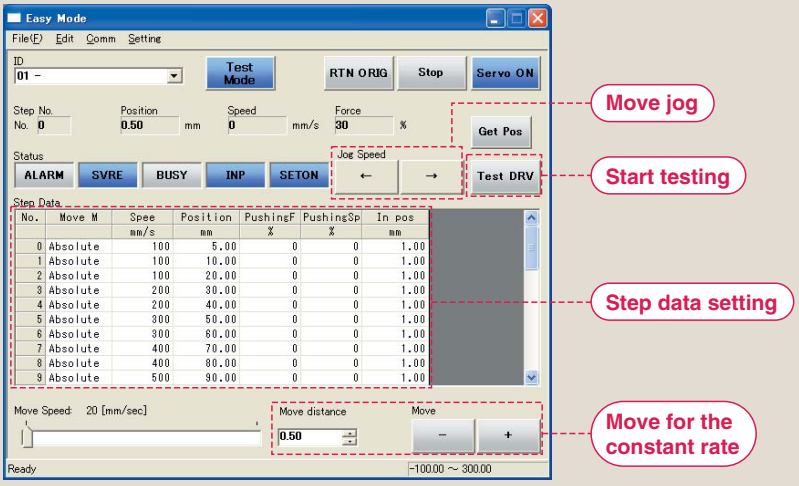

Detail Setting Normal Mode

Select normal mode when detail setting is required.

- Step data can be set in detail.
- Signals and terminal status can be monitored.
- Parameters can be set.
- JOG and constant rate movement, return to origin, test operation and testing of compulsory output can be performed.

<When using a Teaching Box>

- In the test operation, the actuator is continuously operated by a maximum of 5 step data.
- Step data can be copied to several controllers by saving the step data in the teaching box.

Teaching box screen

- Each function (step data setting, test, monitor, etc.) can be selected from the main menu.

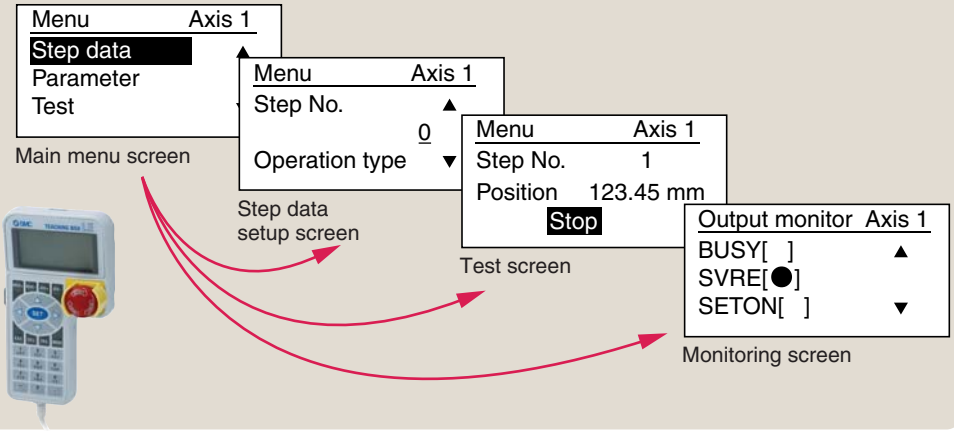

<When using a PC> Controller setting software

- Step data setting, parameter setting, monitor, teaching, etc., are indicated in different windows.

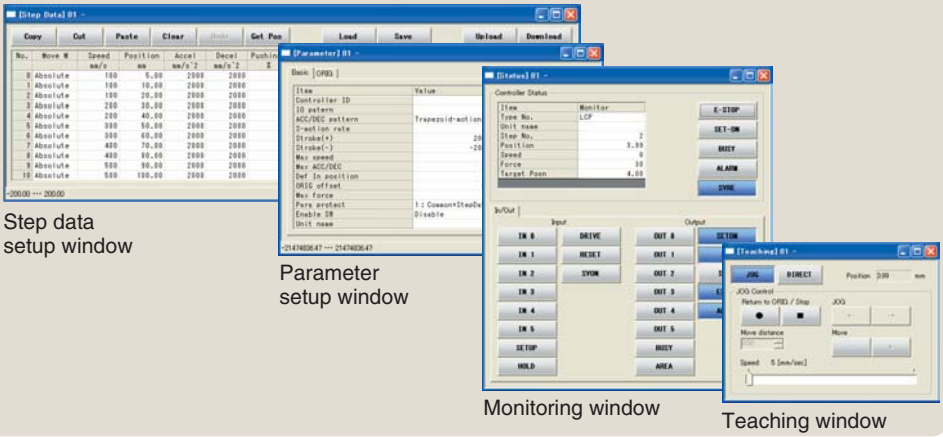

Setting Items

TB : Teaching box
PC: Controller setting software

Function		Contents	Easy mode		Normal mode
			TB	PC	TB, PC
Step data setting	Speed	Can be set in units of 1 mm/s.	○	○	○
	Position	Can be set in units of 0.01 mm.	○	○	○
	Acceleration/Deceleration	Can be set in units of 1 mm/s².	×	○	○
	Pushing force	Positioning operation: Set to 0%.	×	×	×
	Trigger LV	Positioning operation: Set to 0%.	×	×	×
	Pushing speed	Can be set to pushing speed.	×	×	×
	Positioning force	Positioning force: Set to 100% at step motor, 250% at servo motor.	×	○	○
	Area output	Can be set in units of 0.01 mm.	×	○	○
	In position	During positioning operation: Width to the target position. It should be set to 0.5 or more.	×	○	○
Parameter setting (Excerpt)	Stroke (+)	+ side limit of position (Unit: 0.01 mm)	×	×	○
	Stroke (–)	– side limit of position (Unit: 0.01 mm)	×	×	○
	ORIG direction	Direction of the return to the original position can be set.	×	×	○
	ORIG speed	Speed when returning to the original position can be set.	×	×	○
	ORIG ACC	Acceleration when returning to the original position can be set.	×	×	○
Test	JOG	Continuous operation at the set speed can be tested while the switch is being pressed.	○	○	○
	MOVE	Operation at the set distance and speed from the current position can be tested.	×	○	○
	Return to ORIG	Returning to the original position can be tested.	○	○	○
	Test drive	The operation of the specified step data can be tested.	○	○	○ (Continuous operation is available.)
	Compulsory output	ON/OFF of the output terminal can be tested.	×	×	○
Monitor	DRV mon	Current position, current speed, current force and the specified step data No. can be monitored.	○	○	○
	In/Out mon	Current ON/OFF status of the input and output terminal can be monitored.	×	×	○
ALM	Active ALM	Alarm currently being generated can be confirmed.	○	○	○
	ALM Log record	Alarm generated in the past can be confirmed.	×	×	○
File	Save/Load	Step data and parameter of the objective controller can be saved, forwarded and deleted.	×	×	○
Other	Language	Can be changed to Japanese or English.	○*2	○*3	○*2, *3

*1 Every parameter is set to the recommended condition before shipment from the factory. Please change the setting of the items which require adjustment.
*2 Teaching box: In the normal mode, the teaching box can be set to work in English or Japanese.
*3 Controller setting software: Can be installed by selecting English or Japanese version.

System Construction

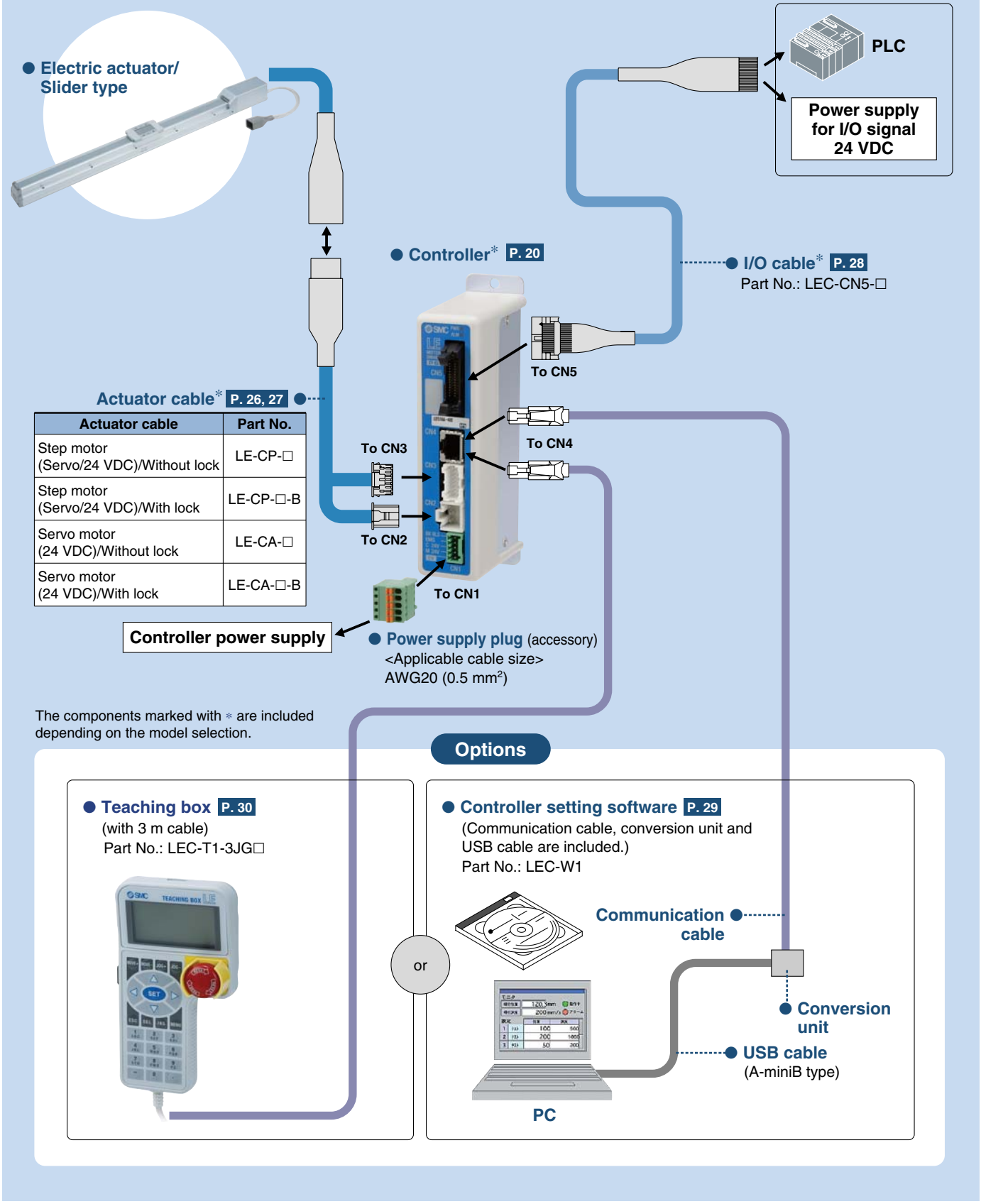

Actuator cable	Part No.
Step motor (Servo/24 VDC)/Without lock	LE-CP-□
Step motor (Servo/24 VDC)/With lock	LE-CP-□-B
Servo motor (24 VDC)/Without lock	LE-CA-□
Servo motor (24 VDC)/With lock	LE-CA-□-B

Series LEF
Model Selection

Model Selection

Positioning Control Selection Procedure

Step 1 Confirm the work load – speed. → **Step 2** Confirm the cycle time. → **Step 3** Confirm the allowable moment.

Selection Example

Operating Conditions

- Workpiece mass: 5 [kg]
- Speed: 300 [mm/s]
- Acceleration/Deceleration: 3000 [mm/s²]
- Stroke: 200 [mm]
- Mounting orientation: Horizontal upward
- Workpiece mounting condition:

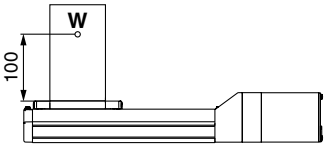

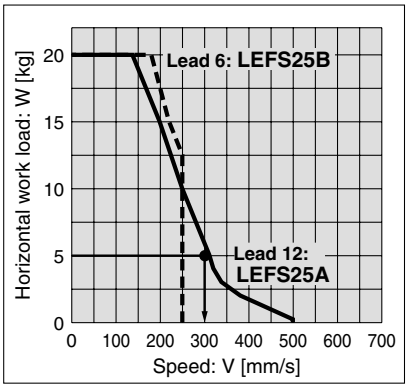

<Speed–Work load graph> (LEFS25/Step motor)

Step 1 **Confirmation of work load–speed <Speed–Work load graph>** (P. 2 and 3)

Select the target model based on the workpiece mass and speed with reference to the (Speed–Work load graph).
The **LEFS25A-200** is temporarily selected based on the graph shown on the right side.

Step 2 **Confirmation of cycle time**

Calculate the cycle time using the following calculation method.

Cycle time:
T can be found from the following equation.

$T = T1 + T2 + T3 + T4$ [s]

- T1:
  Acceleration time and T3: Deceleration time can be obtained by the following equation.

  $T1 = V/a1$ [s] $T3 = V/a2$ [s]

- T2:
  Constant speed time can be found from the following equation.

  $$T2 = \frac{L - 0.5 \cdot V \cdot (T1 + T3)}{V} \text{ [s]}$$

- T4:
  Settling time varies depending on the conditions such as motor types, load and in positioning of the step data. Therefore, please calculate the settling time with reference to the following value.

  $T4 = 0.2$ [s]

Calculation example
T1 to T4 can be calculated as follows.

$T1 = V/a1 = 300/3000 = 0.1$ [s],

$T3 = V/a2 = 300/3000 = 0.1$ [s]

$$T2 = \frac{L - 0.5 \cdot V \cdot (T1 + T3)}{V} = \frac{200 - 0.5 \cdot 300 \cdot (0.1 + 0.1)}{300} = 0.57 \text{ [s]}$$

$T4 = 0.2$ [s]

Therefore, the cycle time can be obtained as follows.

$T = T1 + T2 + T3 + T4$
$= 0.1 + 0.57 + 0.1 + 0.2$
$=$ **0.97 [s]**

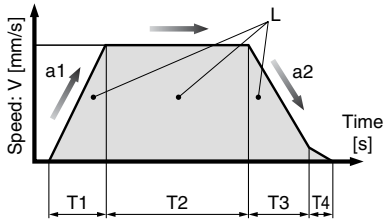

L : Stroke [mm]
··· (Operating condition)

V : Speed [mm/s]
··· (Operating condition)

a1 : Acceleration [mm/s²]
··· (Operating condition)

a2 : Deceleration [mm/s²]
··· (Operating condition)

T1 : Acceleration time [s]
Time until reaching the set speed

T2 : Constant speed time [s]
Time while the actuator is operating at a constant speed

T3 : Deceleration time [s]
Time from the beginning of the constant speed operation to stop

T4 : Settling time [s]
Time until in position is completed

Step 3 **Confirmation of guide moment**

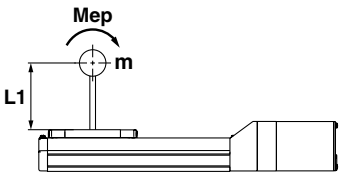

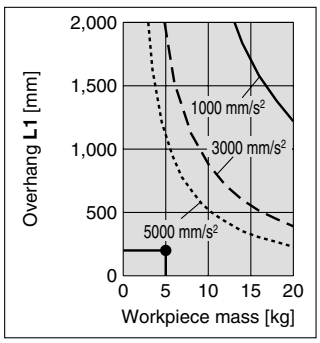

Based on the above calculation result, the LEFS25A-200 is selected.

Model Selection

Speed–Work Load Graph (Guide)
Step Motor (Servo/24 VDC)

∗ The following graph shows the values when positioning force is 100%.

LEFS16/Ball Screw Drive

Horizontal

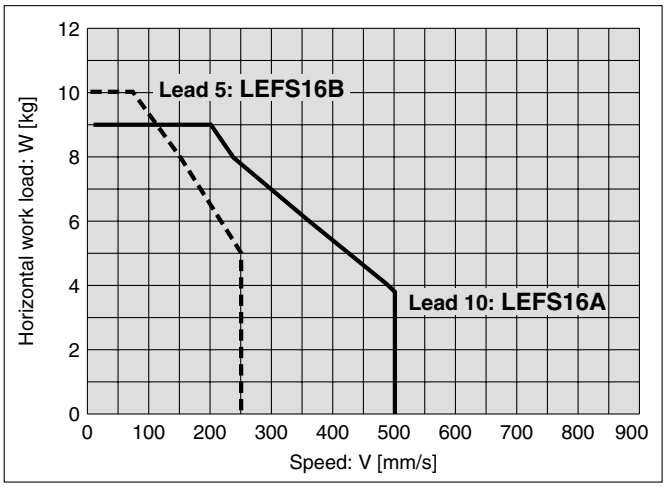

Vertical

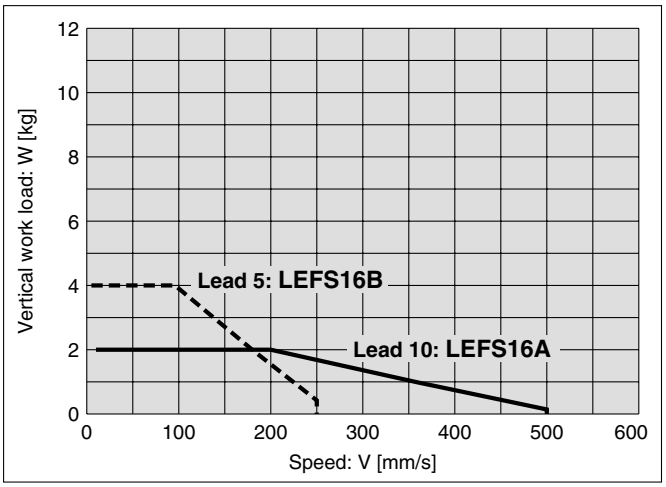

LEFS25/Ball Screw Drive

Horizontal

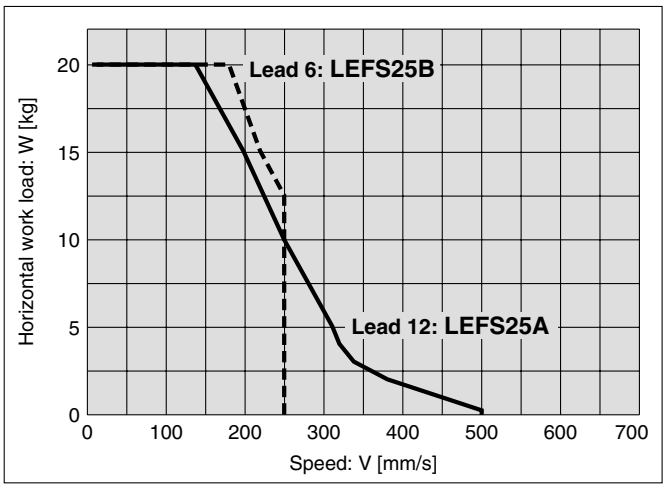

Vertical

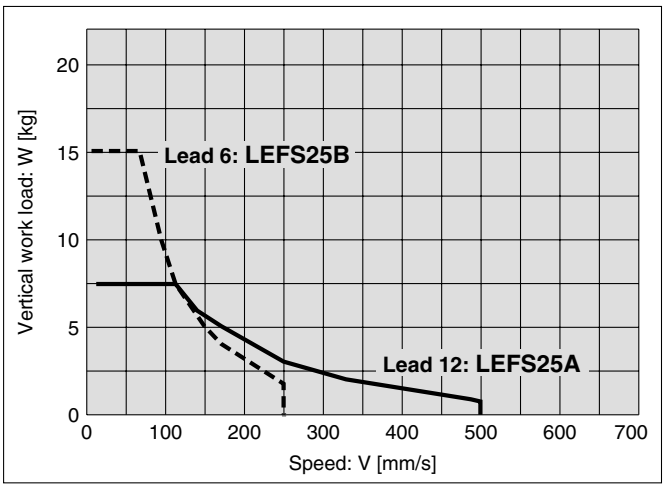

LEFS32/Ball Screw Drive

Horizontal

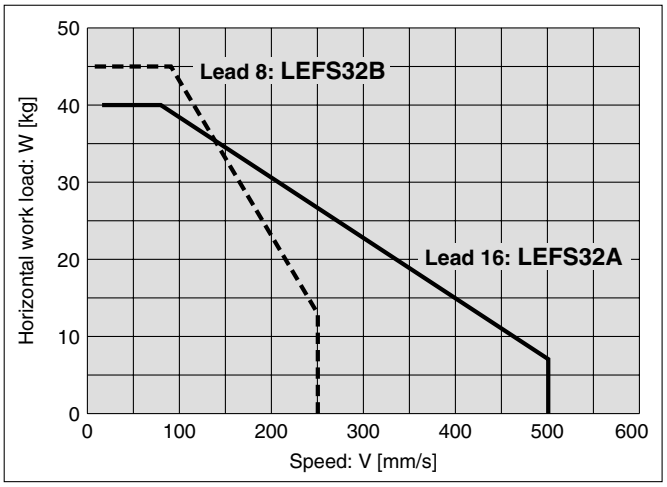

Vertical

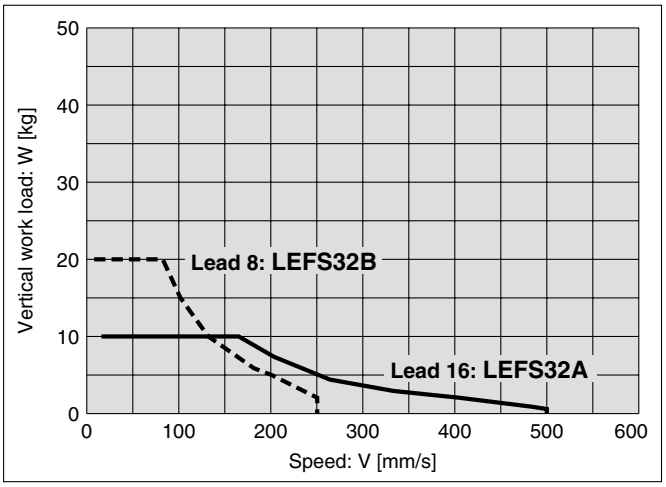

Speed–Work Load Graph (Guide)
Servo Motor (24 VDC)

∗ The following graph shows the values when positioning force is 250%.

LEFS16A/Ball Screw Drive

Horizontal

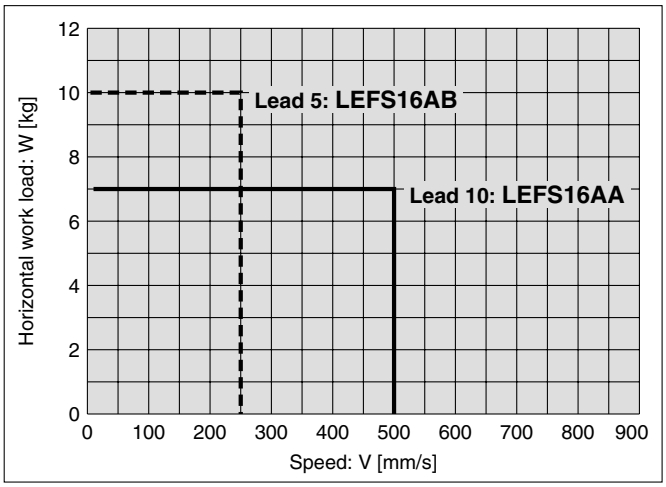

Vertical

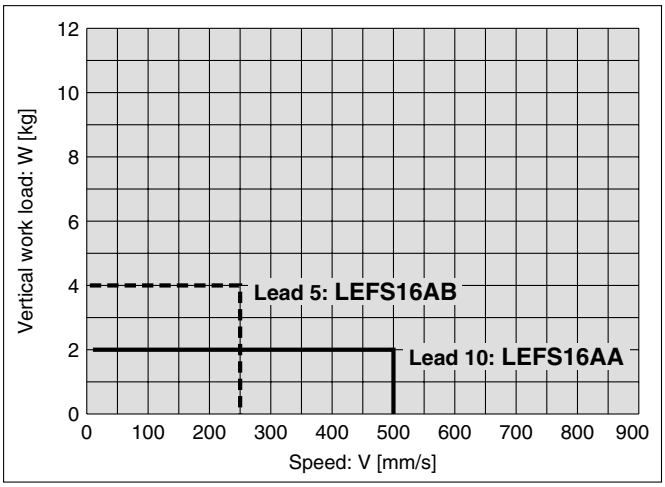

LEFS25A/Ball Screw Drive

Horizontal

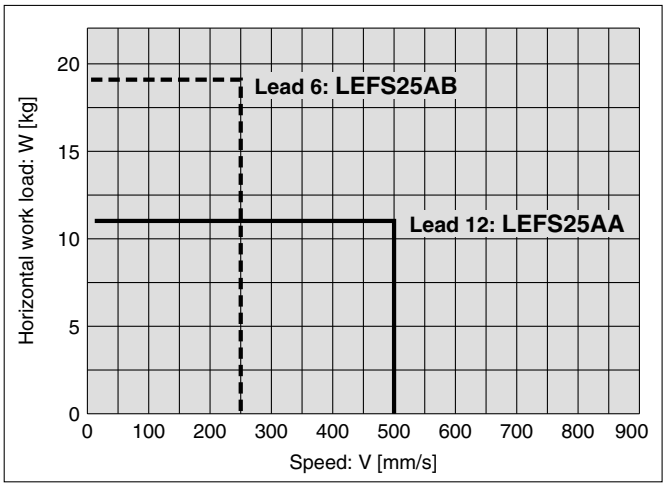

Vertical

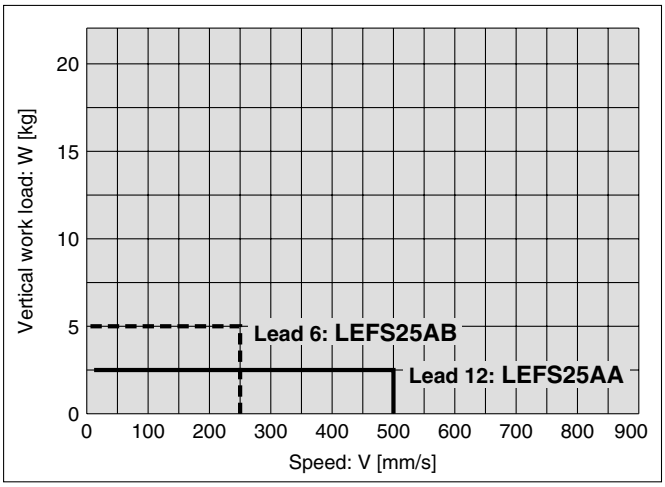

Step Motor (Servo/24 VDC)

LEFB/Belt Drive

∗ When positioning force is 100%

Horizontal

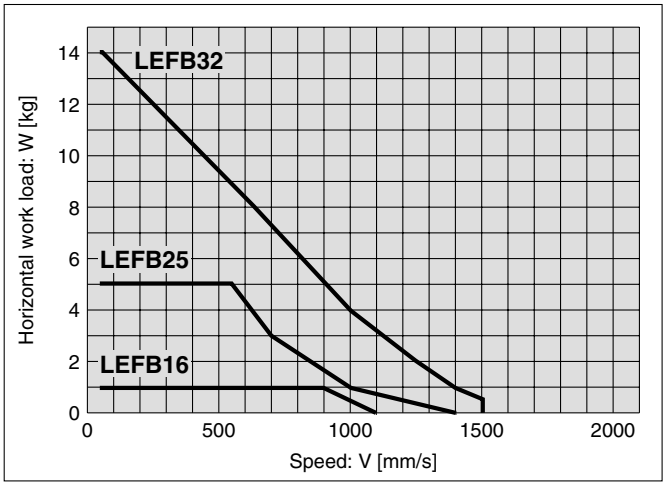

Servo Motor (24 VDC)

LEFB/Belt Drive

∗ When positioning force is 250%

Horizontal

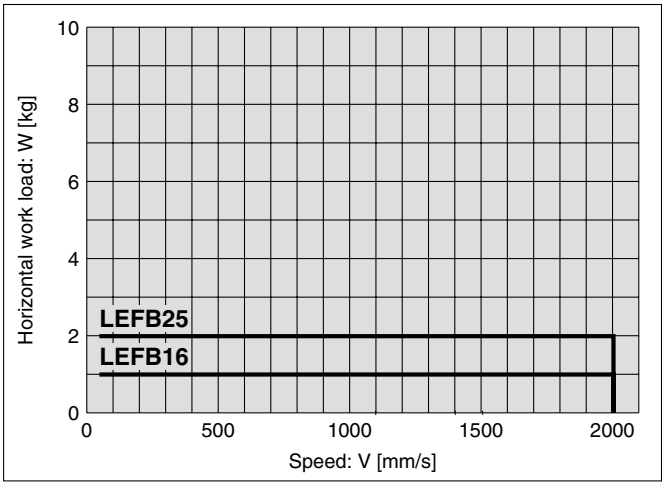

Dynamic Allowable Moment

Acceleration ——— 1000 mm/s² — — — 3000 mm/s² ····· 5000 mm/s²

Orientation	Load overhanging direction **m** : Work load [kg] **Me**: Dynamic allowable moment [N·m] **L** : Amount of overhang to the center of gravity of the workpiece [mm]		Model		
			LEF16	**LEF25**	**LEF32**
Horizontal	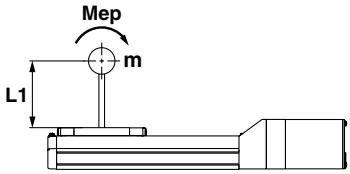	**Pitching**	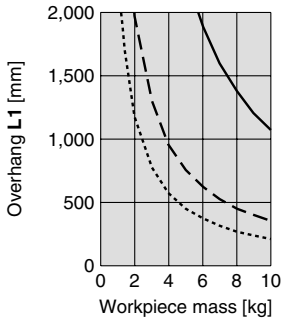	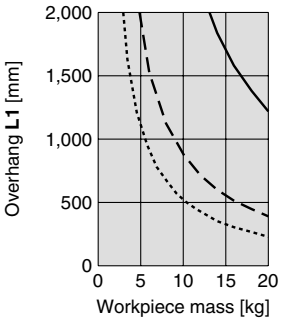	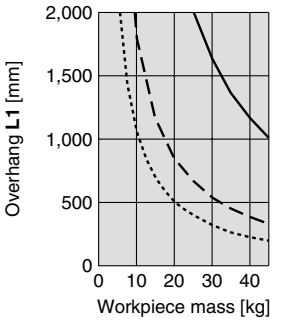
	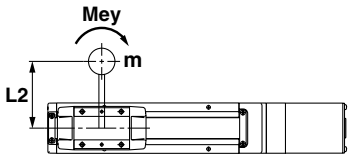	**Yawing**	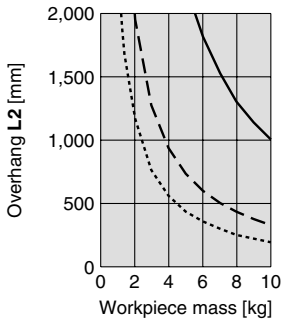	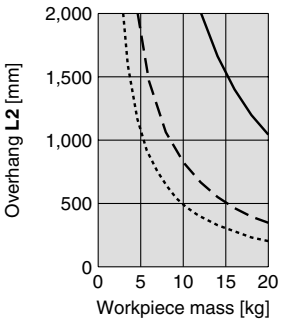	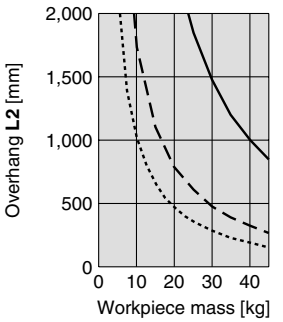
	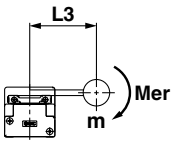	**Rolling**	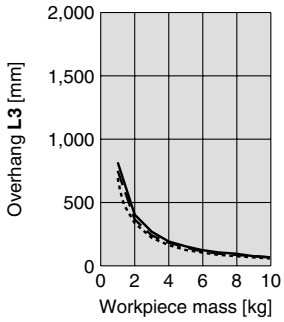	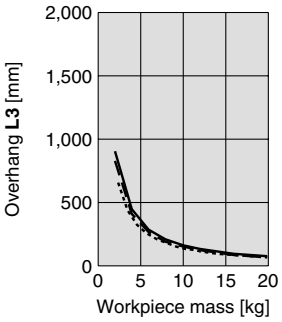	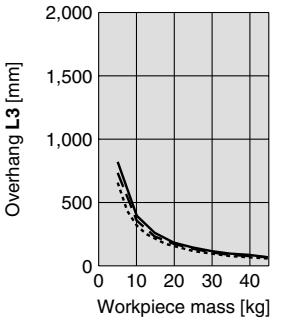
Vertical	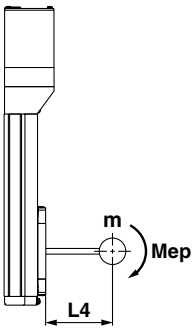	**Pitching**	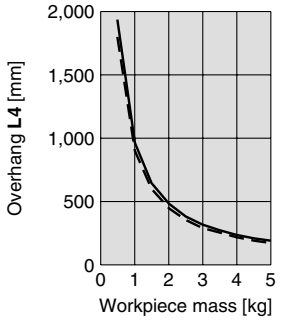	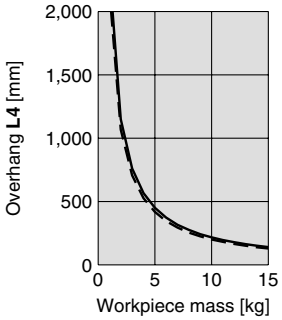	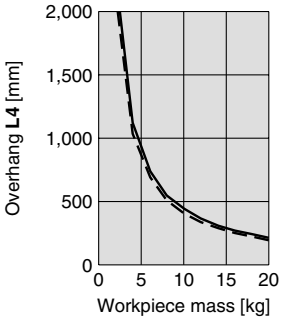
	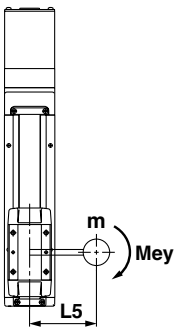	**Yawing**	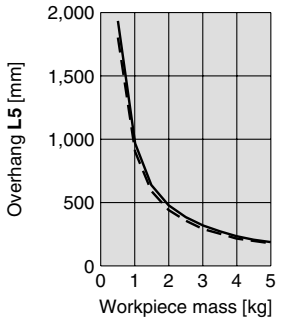	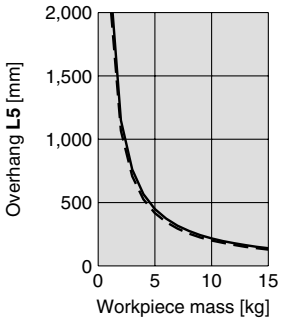	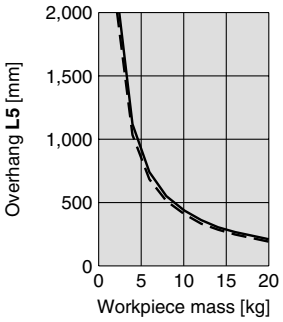

Table Accuracy

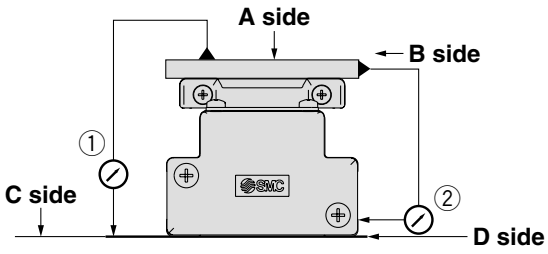

Model	Traveling parallelism [mm] (Every 300 mm)	
	① C side traveling parallelism to A side	② D side traveling parallelism to B side
LEF16	0.05	0.03
LEF25	0.05	0.03
LEF32	0.05	0.03

Note) Traveling parallelism does not include the mounting surface accuracy.

Table Displacement (Reference Value)

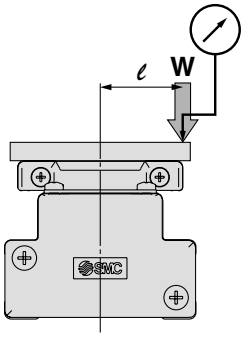

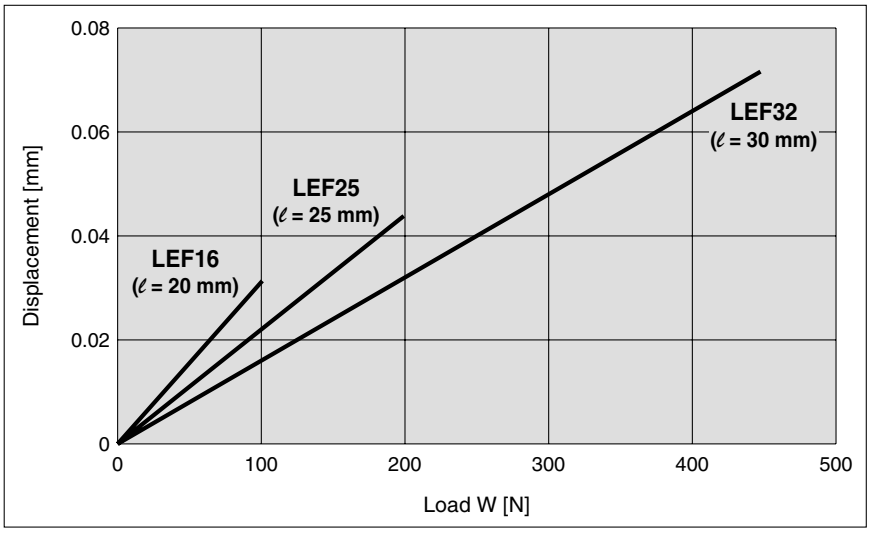

Note) This displacement is measured when a 15 mm aluminum plate is mounted and fixed on the table.

Electric Actuator/Slider Type
Ball Screw Drive
Series LEFS
LEFS16, 25, 32

CE

How to Order

LEFS 16 [ ] B – 100 [ ] – R 1 6N 1 [ ]

Size

16
25
32

Motor type

Symbol	Type	Applicable size		
		LEFS16	LEFS25	LEFS32
Nil	Step motor (Servo/24 VDC)	●	●	●
A	Servo motor Note) (24 VDC)	●	●	—

Lead

Symbol	LEFS16	LEFS25	LEFS32
A	10 mm	12 mm	16 mm
B	5 mm	6 mm	8 mm

Stroke

100	100 mm
~	~
800	800 mm

∗ Refer to the stroke table.

Motor option

Nil	Without lock
B	With lock

Actuator cable type

Nil	Without cable
R	Robotic cable (Flexible cable)

Actuator cable length

Nil	Without cable	8	8 m∗
1	1.5 m	A	10 m∗
3	3 m	B	15 m∗
5	5 m	C	20 m∗

∗ Produced upon receipt of order

Controller type

Nil	Without controller
6N	With controller (NPN)
6P	With controller (PNP)

I/O cable length

Nil	Without cable
1	1.5 m
3	3 m
5	5 m

Controller mounting

Nil	Screw mounting
D	DIN rail mounting

⚠Caution

Note) CE-compliant products

① EMC compliance was tested by combining the electric actuator LEF series and the controller LEC series. The EMC depends on the configuration of the customer's control panel and the relationship with other electrical equipment and wiring. Therefore conformity to the EMC directive cannot be certified for SMC components incorporated into the customer's equipment under actual operating conditions. As a result it is necessary for the customer to verify conformity to the EMC directive for the machinery and equipment as a whole.

② For the servo motor (24 VDC) specification, EMC compliance was tested by installing a noise filter set (LEC-NFA). Refer to page 28 for the noise filter set. Refer to the LECA Operation Manual for installation.

∗ Stroke table ●Standard/○ Produced upon receipt of order

Model \ Stroke	100	200	300	400	500	600	700	800
LEFS16	●	●	●	○	—	—	—	—
LEFS25	●	●	●	○	●	○	—	—
LEFS32	●	●	●	○	●	○	○	○

∗ Strokes other than those mentioned above are available as a special.

The actuator and controller are sold as a package. (Controller → Page 20)

Confirm that the combination of the controller and the actuator is compatible.

<Be sure to check the following before use.>

① Check that actuator label for model number. This matches the controller.

② Check Parallel I/O configuration matches (NPN or PNP).

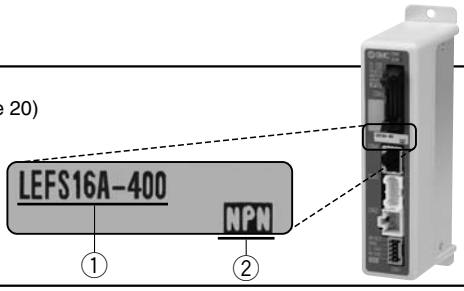

∗ Refer to the operation manual for using the products. Please download it via our website. http://www.smcworld.com/

Note 1) Strokes shown in ( ) are produced upon receipt of order.
Note 2) Speed is dependent on the work load. Check "Speed–Work Load Graph (Guide)" on page 2.
Note 3) Impact resistance: No malfunction occurred when the actuator was tested with a drop tester in both an axial direction and a perpendicular direction to the lead screw. (Test was performed with the actuator in the initial state.)
Vibration resistance: No malfunction occurred in a test ranging between 45 to 2000 Hz. Test was performed in both an axial direction and a perpendicular direction to the lead screw. (Test was performed with the actuator in the initial state.)
Note 4) Power consumption (including the controller) is for when the actuator is operating.
Note 5) Standby power consumption when operating (including the controller) is for when the actuator is stopped in the set position during operation.
Note 6) Momentary max. power consumption (including the controller) is for when the actuator is operating. This value can be used for the selection of the power supply.
Note 7) With lock only
Note 8) For an actuator with lock, add the power consumption for the lock.

Specifications

Step Motor (Servo/24 VDC)

	Model		LEFS16		LEFS25		LEFS32	
Actuator specifications	Stroke [mm] Note 1)		100, 200, 300 (400)		100, 200, 300 (400), 500, (600)		100, 200, 300, (400) 500, (600, 700, 800)	
	Work load [kg] Note 2)	Horizontal	9	10	20	20	40	45
		Vertical	2	4	7.5	15	10	20
	Speed [mm/s] Note 2)		10 to 500	5 to 250	12 to 500	6 to 250	16 to 500	8 to 250
	Positioning repeatability [mm]		±0.02					
	Lead [mm]		10	5	12	6	16	8
	Impact/Vibration resistance [m/s²] Note 3)		50/20					
	Actuation type		Ball screw					
	Guide type		Linear guide					
	Operating temp. range [°C]		5 to 40 (No condensation and freezing)					
	Operating humidity range [%]		35 to 85 (No condensation and freezing)					
Electric specifications	Motor size		□28		□42		□56.4	
	Motor type		Step motor (Servo 24 VDC)					
	Encoder		Incremental A/B phase (800 pulse/rotation)					
	Rated voltage [V]		24 VDC ±10%					
	Power consumption [W] Note 4)		22		38		50	
	Standby power consumption when operating [W] Note 5)		18		16		44	
	Momentary max. power consumption [W] Note 6)		51		57		123	
	Controller weight [kg]		0.15 (Screw mounting), 0.17 (DIN rail mounting)					
Lock unit specifications	Type Note 7)		Non-energizing operation type					
	Holding force (N)		20	39	78	157	108	216
	Power consumption [W] Note 8)		3.6		5		5	
	Rated voltage [V]		24 VDC ±10%					

Servo Motor (24 VDC)

	Model		LEFS16A		LEFS25A	
Actuator specifications	Stroke [mm] Note 1)		100, 200, 300 (400)		100, 200, 300 (400), 500, (600)	
	Work load [kg] Note 2)	Horizontal	7	10	11	18
		Vertical	2	4	2.5	5
	Speed [mm/s]		10 to 500	5 to 250	12 to 500	6 to 250
	Positioning repeatability [mm]		±0.02			
	Lead [mm]		10	5	12	6
	Impact/Vibration resistance [m/s²] Note 3)		50/20			
	Actuation type		Ball screw			
	Guide type		Linear guide			
	Operating temp. range [°C]		5 to 40 (No condensation and freezing)			
	Operating humidity range [%]		35 to 85 (No condensation and freezing)			
Electric specifications	Motor size		□28		□42	
	Motor output [W]		30		36	
	Motor type		Servo motor (24 VDC)			
	Encoder		Incremental A/B phase (800 pulse/rotation)/Z phase			
	Rated voltage [V]		24 VDC ±10%			
	Power consumption [W] Note 4)		63		102	
	Standby power consumption when operating [W] Note 5)		Horizontal 4/ Vertical 9		Horizontal 4/ Vertical 9	
	Momentary max. power consumption [W] Note 6)		70		113	
	Controller weight [kg]		0.15 (Screw mounting), 0.17 (DIN rail mounting			
Lock unit specifications	Type Note 7)		Non-energizing operation type			
	Holding force (N)		20	39	78	157
	Power consumption [W] Note 8)		3.6		5	
	Rated voltage [V]		24 VDC ±10%			

Note 1) Strokes shown in ( ) are produced upon receipt of order.
Note 2) Check "Speed–Work Load Graph (Guide)" on page 3.
Note 3) Impact resistance: No malfunction occurred when the actuator was tested with a drop tester in both an axial direction and a perpendicular direction to the lead screw. (Test was performed with the actuator in the initial state.)
Vibration resistance: No malfunction occurred in a test ranging between 45 to 2000 Hz. Test was performed in both an axial direction and a perpendicular direction to the lead screw. (Test was performed with the actuator in the initial state.)
Note 4) Power consumption (including the controller) is for when the actuator is operating.
Note 5) Standby power consumption when operating (including the controller) is for when the actuator is stopped in the set position during operation.
Note 6) Momentary max. power consumption (including the controller) is for when the actuator is operating. This value can be used for the selection of the power supply.
Note 7) With lock only
Note 8) For an actuator with lock, add the power consumption for the lock.

Model	LEFS16				LEFS25						LEFS32							
Stroke [mm]	100	200	300	(400)	100	200	300	(400)	500	(600)	100	200	300	(400)	500	(600)	(700)	(800)
Product weight [kg]	0.90	1.05	1.20	1.35	1.84	2.12	2.40	2.68	2.96	3.24	3.35	3.75	4.15	4.55	4.95	5.35	5.75	6.15
Additional weight with lock [kg]	0.12				0.19						0.35							

Construction

Series LEFS

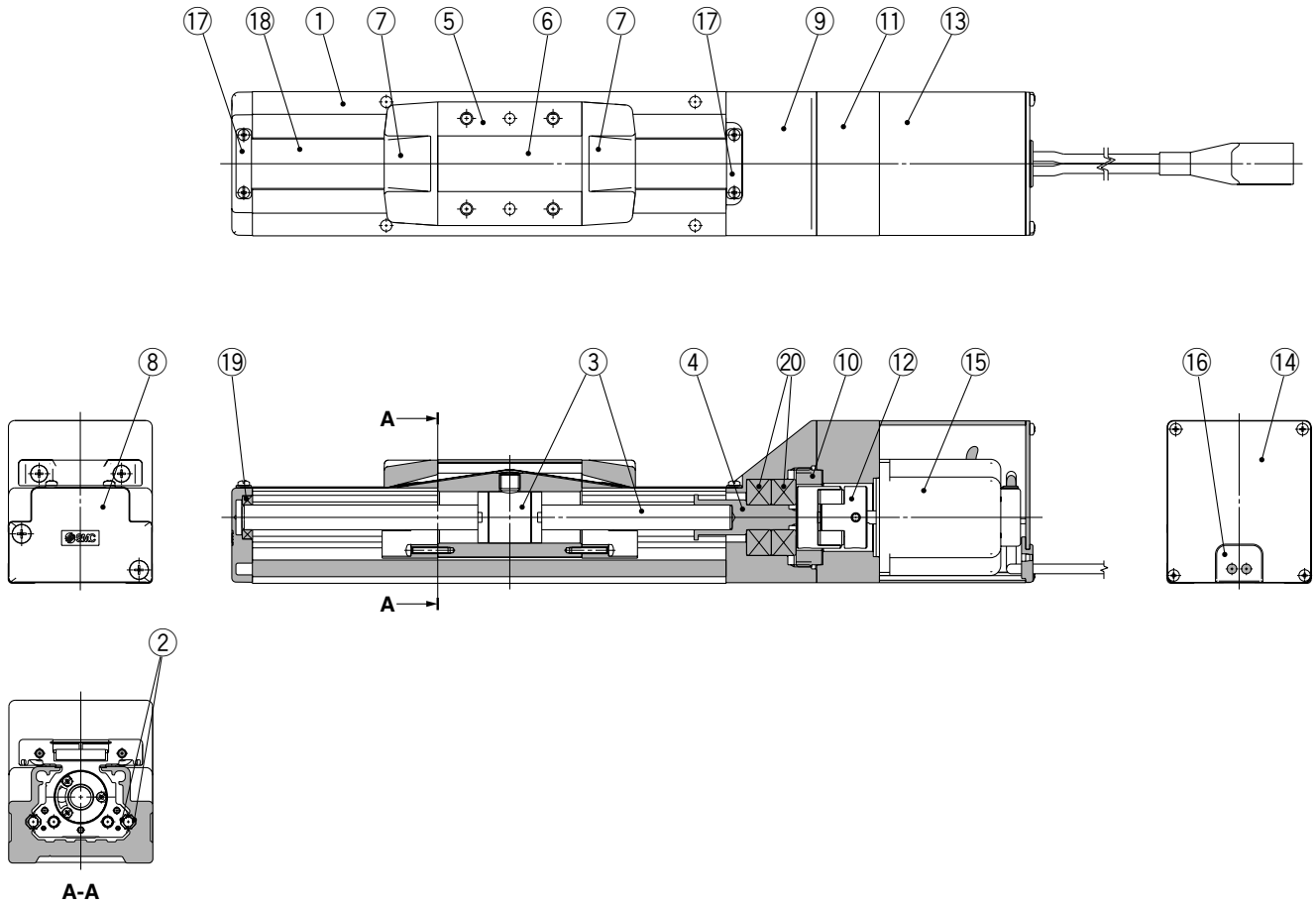

No.	Description	Material	Note
1	**Body**	Aluminum alloy	Anodized
2	**Rail guide**	—	
3	**Ball screw assembly**	—	
4	**Connected shaft**	Stainless steel	
5	**Table**	Aluminum alloy	Anodized
6	**Blanking plate**	Aluminum alloy	Anodized
7	**Seal band stopper**	Synthetic resin	
8	**Housing A**	Aluminum die-casted	Chromated
9	**Housing B**	Aluminum alloy	Anodized
10	**Bearing stopper**	Aluminum alloy	
11	**Motor mount**	Aluminum alloy	Anodized
12	**Coupling**	—	
13	**Motor cover**	Aluminum alloy	Anodized
14	**End cover**	Aluminum alloy	Anodized
15	**Motor**	—	
16	**Rubber bushing**	NBR	
17	**Band stopper**	Stainless steel	
18	**Dust seal band**	Stainless steel	
19	**Bearing**	—	
20	**Bearing**	—	

Dimensions: Ball Screw Drive

LEFS16

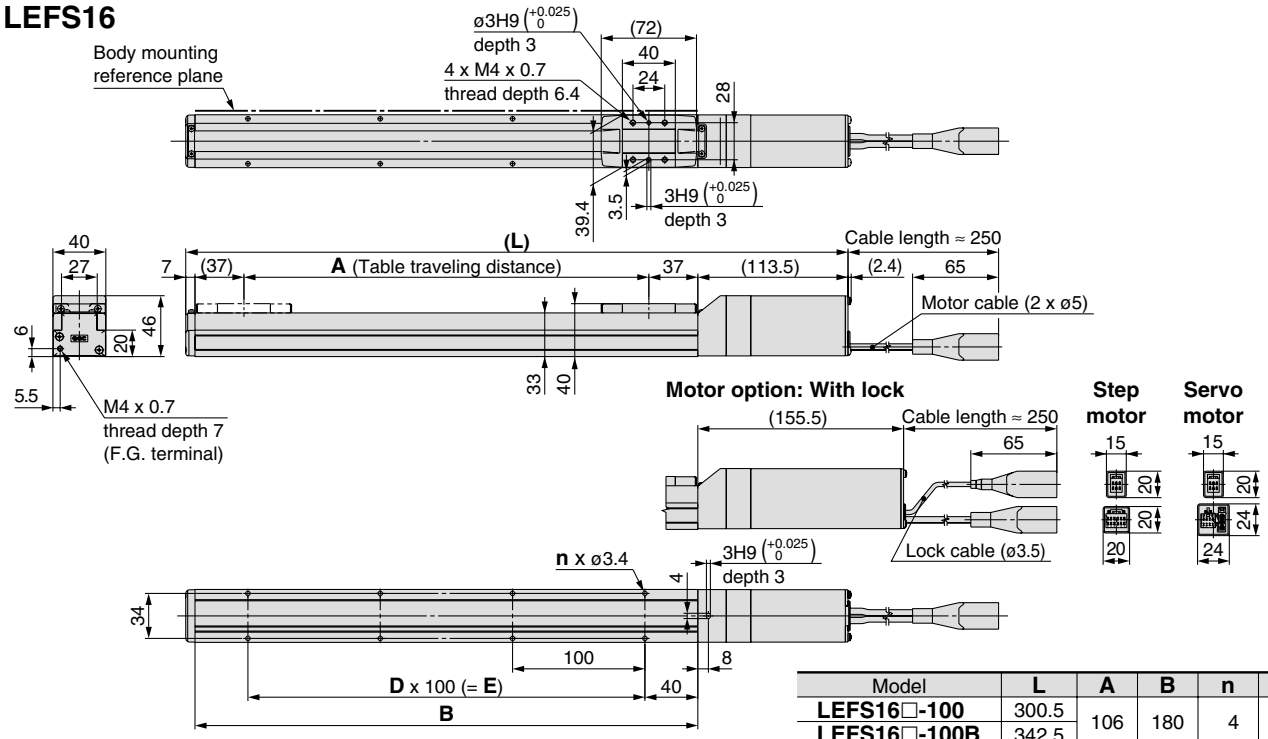

Model	L	A	B	n	D	E
LEFS16□-100	300.5	106	180	4	—	—
LEFS16□-100B	342.5					
LEFS16□-200	400.5	206	280	6	2	200
LEFS16□-200B	442.5					
LEFS16□-300	500.5	306	380	8	3	300
LEFS16□-300B	542.5					
LEFS16□-400	600.5	406	480	10	4	400
LEFS16□-400B	642.5					

LEFS25

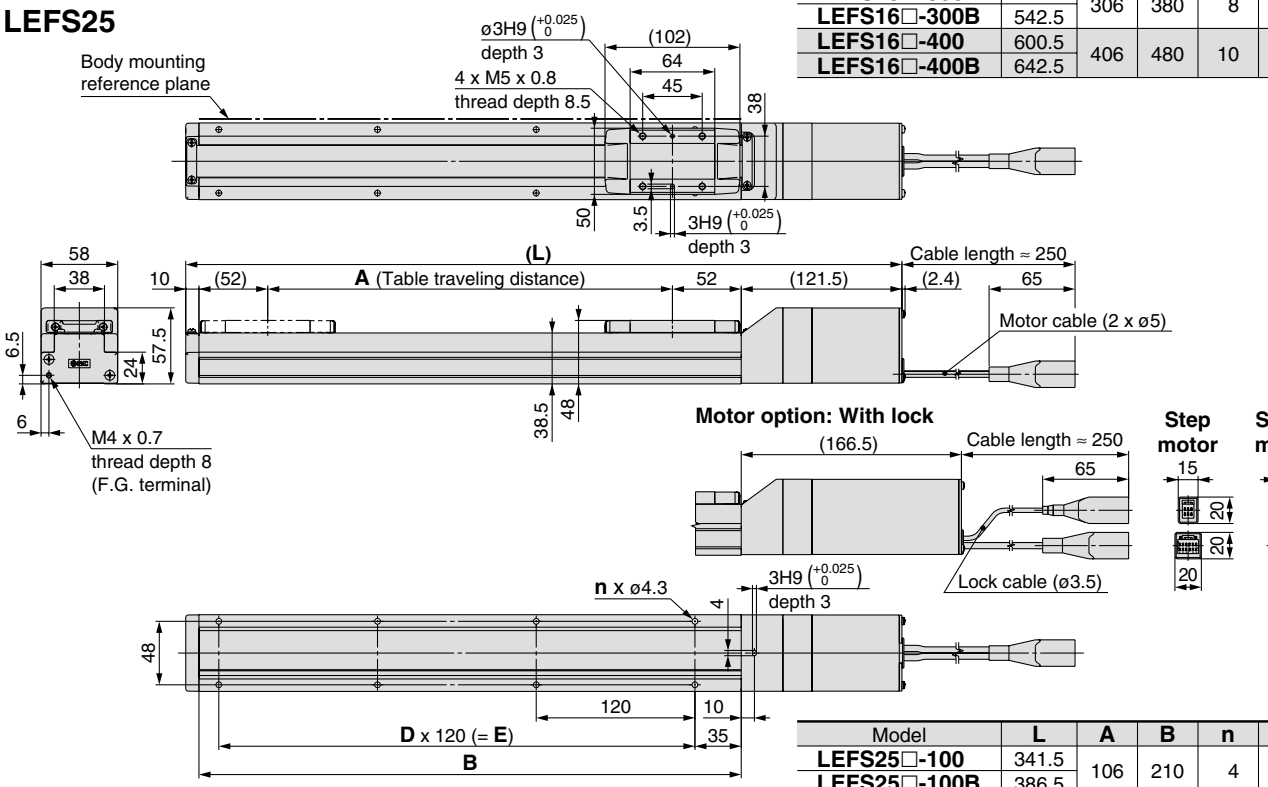

Model	L	A	B	n	D	E
LEFS25□-100	341.5	106	210	4	—	—
LEFS25□-100B	386.5					
LEFS25□-200	441.5	206	310	6	2	240
LEFS25□-200B	486.5					
LEFS25□-300	541.5	306	410	8	3	360
LEFS25□-300B	586.5					
LEFS25□-400	641.5	406	510	8	3	360
LEFS25□-400B	686.5					
LEFS25□-500	741.5	506	610	10	4	480
LEFS25□-500B	786.5					
LEFS25□-600	841.5	606	710	12	5	600
LEFS25□-600B	886.5					

Dimensions: Ball Screw Drive

LEFS32

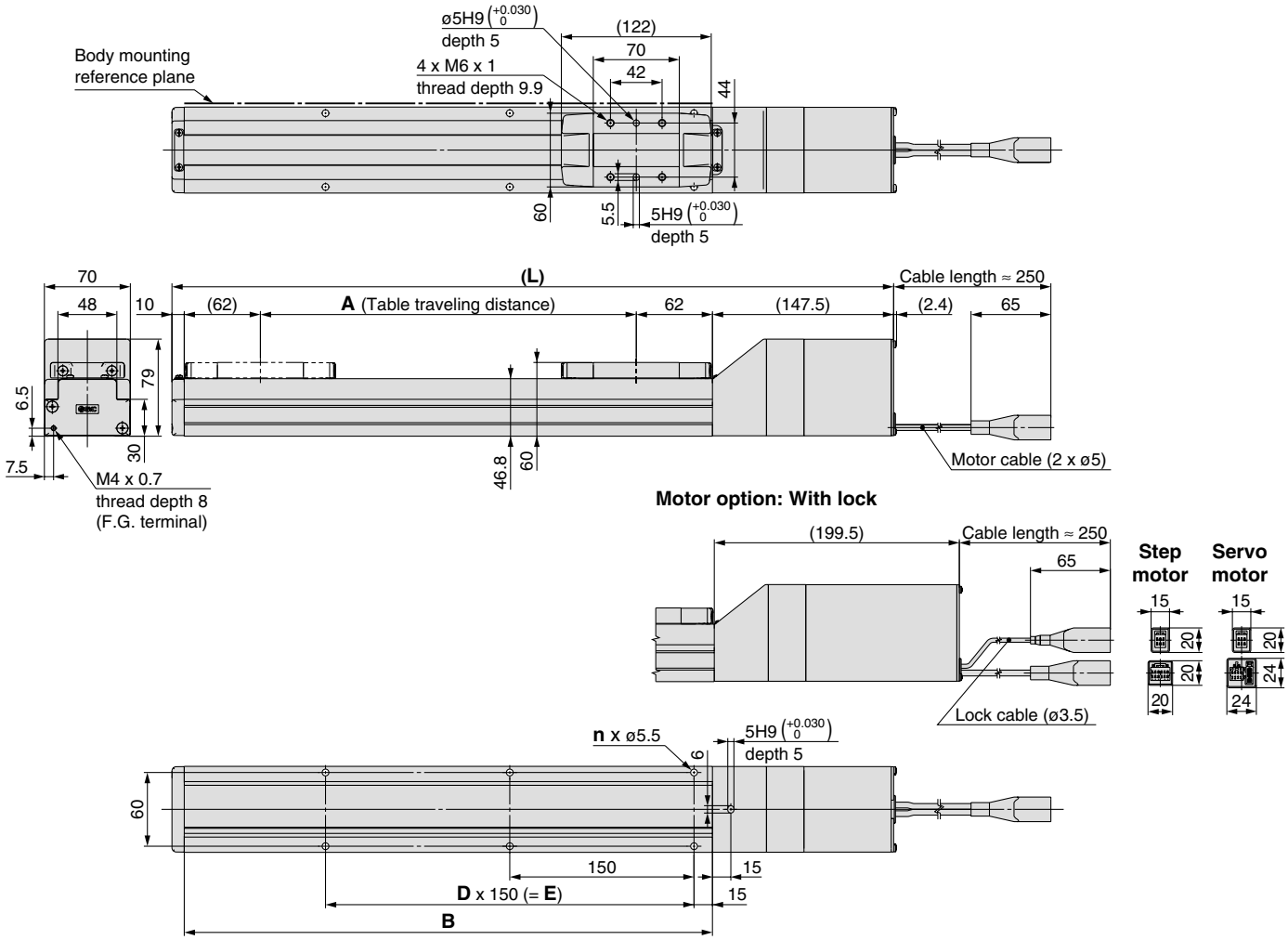

Model	L	A	B	n	D	E
LEFS32□-100	387.5	106	230	4	—	—
LEFS32□-100B	439.5					
LEFS32□-200	487.5	206	330	6	2	300
LEFS32□-200B	539.5					
LEFS32□-300	587.5	306	430	6	2	300
LEFS32□-300B	639.5					
LEFS32□-400	687.5	406	530	8	3	450
LEFS32□-400B	739.5					
LEFS32□-500	787.5	506	630	10	4	600
LEFS32□-500B	839.5					
LEFS32□-600	887.5	606	730	10	4	600
LEFS32□-600B	939.5					
LEFS32□-700	987.5	706	830	12	5	750
LEFS32□-700B	1039.5					
LEFS32□-800	1087.5	806	930	14	6	900
LEFS32□-800B	1139.5					

Electric Actuator/Slider Type
Belt Drive
Series LEFB
LEFB16, 25, 32

CE

How to Order

LEFB 16 ☐ T – 500 ☐ – R 1 6N 1 ☐

Size

16
25
32

Motor type

Symbol	Type	Applicable size		
		LEFB16	LEFB25	LEFB32
Nil	Step motor (Servo/24 VDC)	●	●	●
A	Servo motor Note) (24 VDC)	●	●	—

Equivalent lead

T	48 mm

Stroke

300	300 mm
~	~
2000	2000 mm

∗ Refer to the stroke table.

Motor option

Nil	Without lock
B	With lock

Actuator cable type

Nil	Without cable
R	Robotic cable (Flexible cable)

∗ Belt drive actuator cannot be used for vertically mounted applications.

Actuator cable length

Nil	Without cable	8	8 m∗
1	1.5 m	A	10 m∗
3	3 m	B	15 m∗
5	5 m	C	20 m∗

∗ Produced upon receipt of order

Controller type

Nil	Without controller
6N	With controller (NPN)
6P	With controller (PNP)

I/O cable length

Nil	Without cable
1	1.5 m
3	3 m
5	5 m

Controller mounting

Nil	Screw mounting
D	DIN rail mounting

⚠Caution

Note) CE-compliant products

① EMC compliance was tested by combining the electric actuator LEF series and the controller LEC series. The EMC depends on the configuration of the customer's control panel and the relationship with other electrical equipment and wiring. Therefore conformity to the EMC directive cannot be certified for SMC components incorporated into the customer's equipment under actual operating conditions. As a result it is necessary for the customer to verify conformity to the EMC directive for the machinery and equipment as a whole.

② For the servo motor (24 VDC) specification, EMC compliance was tested by installing a noise filter set (LEC-NFA). Refer to page 28 for the noise filter set. Refer to the LECA Operation Manual for installation.

∗ Stroke table ●Standard/○ Produced upon receipt of order

Model \ Stroke	300	500	600	700	800	900	1000	1200	1500	1800	2000
LEFB16	○	●	○	○	●	○	●	—	—	—	—
LEFB25	○	●	○	○	●	○	●	○	○	○	○
LEFB32	○	●	○	○	●	○	●	○	○	○	○

∗ Strokes other than those mentioned above are available as a special.

The actuator and controller are sold as a package. (Controller → Page 20)

Confirm that the combination of the controller and the actuator is compatible.

<Be sure to check the following before use.>

① Check that actuator label for model number. This matches the controller.

② Check Parallel I/O configuration matches (NPN or PNP).

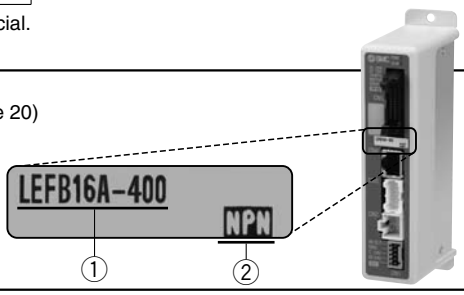

∗ Refer to the operation manual for using the products. Please download it via our website. http://www.smcworld.com/

Note 1) Strokes shown in ( ) are produced upon receipt of order.
Note 2) Speed is dependent on the work load. Check "Speed–Work Load Graph (Guide)" on page 3.
Note 3) Impact resistance: No malfunction occurred when the actuator was tested with a drop tester in both an axial direction and a perpendicular direction to the lead screw. (Test was performed with the actuator in the initial state.)
Vibration resistance: No malfunction occurred in a test ranging between 45 to 2000 Hz. Test was performed in both an axial direction and a perpendicular direction to the lead screw. (Test was performed with the actuator in the initial state.)
Note 4) Power consumption (including the controller) is for when the actuator is operating.
Note 5) Standby power consumption when operating (including the controller) is for when the actuator is stopped in the set position during operation.
Note 6) Momentary max. power consumption (including the controller) is for when the actuator is operating. This value can be used for the selection of the power supply.
Note 7) With lock only
Note 8) For an actuator with lock, add the power consumption for the lock.

Note 1) Strokes shown in ( ) are produced upon receipt of order.
Note 2) Check "Speed–Work Load Graph (Guide)" on page 3.
Note 3) Impact resistance: No malfunction occurred when the actuator was tested with a drop tester in both an axial direction and a perpendicular direction to the lead screw. (Test was performed with the actuator in the initial state.)
Vibration resistance: No malfunction occurred in a test ranging between 45 to 2000 Hz. Test was performed in both an axial direction and a perpendicular direction to the lead screw. (Test was performed with the actuator in the initial state.)
Note 4) Power consumption (including the controller) is for when the actuator is operating.
Note 5) Standby power consumption when operating (including the controller) is for when the actuator is stopped in the set position during operation.
Note 6) Momentary max. power consumption (including the controller) is for when the actuator is operating. This value can be used for the selection of the power supply.
Note 7) With lock only
Note 8) For an actuator with lock, add the power consumption for the lock.

Specifications

Step Motor (Servo/24 VDC)

	Model	LEFB16	LEFB25	LEFB32
Actuator specifications	Stroke [mm] Note 1)	(300), 500, (600, 700) 800, (900), 1000	(300), 500, (600,700), 800, (900) 1000, (1200, 1500, 1800, 2000)	(300), 500, (600,700), 800, (900) 1000, (1200, 1500, 1800, 2000)
	Work load [kg] Note 2) Horizontal	1	5	14
	Speed [mm/s] Note 2)	48 to 1100	48 to 1400	48 to 1500
	Positioning repeatability [mm]	±0.1		
	Equivalent lead [mm]	48	48	48
	Impact/Vibration resistance [m/s²] Note 3)	50/20		
	Actuation type	Belt		
	Guide type	Linear guide		
	Operating temp. range [°C]	5 to 40 (No condensation and freezing)		
	Operating humidity range [%]	35 to 85 (No condensation and freezing)		
Electric specifications	Motor size	□28	□42	□56.4
	Motor type	Step motor (Servo 24 VDC)		
	Encoder	Incremental A/B phase (800 pulse/rotation)		
	Rated voltage [V]	24 VDC ±10%		
	Power consumption [W] Note 4)	24	32	52
	Standby power consumption when operating [W] Note 5)	18	16	44
	Momentary max. power consumption [W] Note 6)	51	60	127
	Controller weight [kg]	0.15 (Screw mounting), 0.17 (DIN rail mounting)		
Lock unit specifications	Type Note 7)	Non-energizing operation type		
	Holding force (N)	4	19	36
	Power consumption [W] Note 8)	3.6	5	5
	Rated voltage [V]	24 VDC ±10%		

Servo Motor (24 VDC)

	Model	LEFB16A	LEFB25A
Actuator specifications	Stroke [mm] Note 1)	(300), 500, (600, 700) 800, (900), 1000	(300), 500, (600,700), 800, (900) 1000, (1200, 1500, 1800, 2000)
	Work load [kg] Note 2) Horizontal	1	2
	Speed [mm/s]	48 to 2000	48 to 2000
	Positioning repeatability [mm]	±0.1	
	Equivalent lead [mm]	48	48
	Impact/Vibration resistance [m/s²] Note 3)	50/20	
	Actuation type	Belt	
	Guide type	Linear guide	
	Operating temp. range [°C]	5 to 40 (No condensation and freezing)	
	Operating humidity range [%]	35 to 85 (No condensation and freezing)	
Electric specifications	Motor size	□28	□42
	Motor output [W]	30	36
	Motor type	Servo motor (24 VDC)	
	Encoder	Incremental A/B phase (800 pulse/rotation)/Z phase	
	Rated voltage [V]	24 VDC ±10%	
	Power consumption [W] Note 4)	78	69
	Standby power consumption when operating [W] Note 5)	Horizontal 4	Horizontal 5
	Momentary max. power consumption [W] Note 6)	87	120
	Controller weight [kg]	0.15 (Screw mounting), 0.17 (DIN rail mounting)	
Lock unit specifications	Type Note 7)	Non-energizing operation type	
	Holding force (N)	4	19
	Power consumption [W] Note 8)	3.6	5
	Rated voltage [V]	24 VDC ±10%	

Model	LEFB16							Additional weight with lock [kg]
Stroke [mm]	(300)	500	(600)	(700)	800	(900)	1000	0.12
Product weight [kg]	1.19	1.45	1.58	1.71	1.84	1.97	2.10	

Model	LEFB25											Additional weight with lock [kg]
Stroke [mm]	(300)	500	(600)	(700)	800	(900)	1000	(1200)	(1500)	(1800)	(2000)	0.19
Product weight [kg]	2.39	2.85	3.08	3.31	3.54	3.77	4.00	4.46	5.15	5.84	6.30	

Model	LEFB32											Additional weight with lock [kg]
Stroke [mm]	(300)	500	(600)	(700)	800	(900)	1000	(1200)	(1500)	(1800)	(2000)	0.35
Product weight [kg]	4.12	4.80	5.14	5.48	5.82	6.16	6.50	7.18	8.20	9.22	9.90	

Construction

Series LEFB

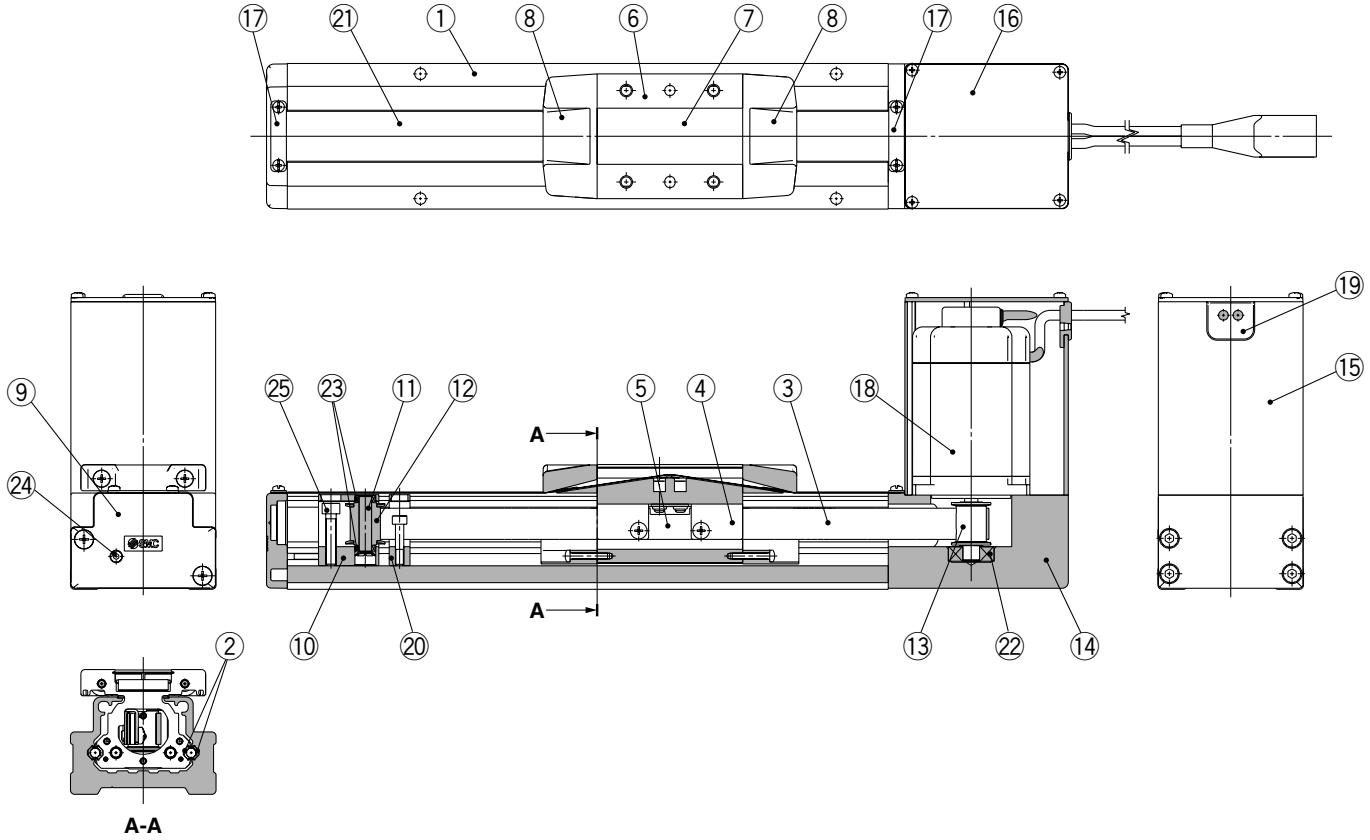

No.	Description	Material	Note
1	**Body**	Aluminum alloy	Anodized
2	**Rail guide**	—	
3	**Belt**	—	
4	**Belt holder**	Carbon steel	Chromated
5	**Belt stopper**	Aluminum alloy	Anodized
6	**Table**	Aluminum alloy	Anodized
7	**Blanking plate**	Aluminum alloy	Anodized
8	**Seal band stopper**	Synthetic resin	
9	**Housing A**	Aluminum die-casted	Chromated
10	**Pulley holder**	Aluminum alloy	
11	**Pulley shaft**	Stainless steel	
12	**End pulley**	Aluminum alloy	Anodized
13	**Motor pulley**	Aluminum alloy	Anodized
14	**Motor mount**	Aluminum alloy	Anodized
15	**Motor cover**	Aluminum alloy	Anodized
16	**End cover**	Aluminum alloy	Anodized
17	**Band stopper**	Stainless steel	
18	**Motor**	—	
19	**Rubber bushing**	NBR	
20	**Stopper**	Aluminum alloy	
21	**Dust seal band**	Stainless steel	
22	**Bearing**	—	
23	**Bearing**	—	
24	**Tension adjustment bolt**	Chromium molybdenum steel	Nickel plated
25	**Pulley fixing bolt**	Chromium molybdenum steel	Nickel plated

Dimensions: Belt Drive

LEFB16

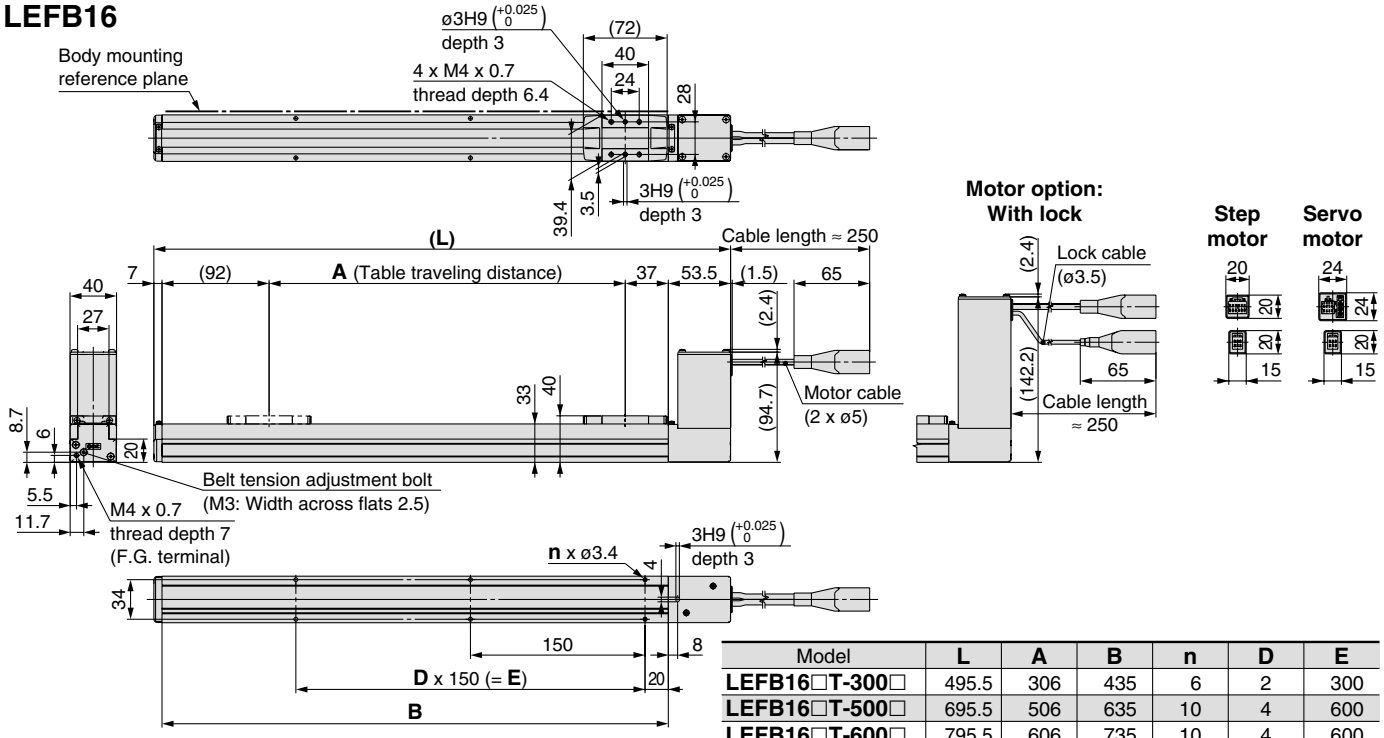

Model	L	A	B	n	D	E
LEFB16□T-300□	495.5	306	435	6	2	300
LEFB16□T-500□	695.5	506	635	10	4	600
LEFB16□T-600□	795.5	606	735	10	4	600
LEFB16□T-700□	895.5	706	835	12	5	750
LEFB16□T-800□	995.5	806	935	14	6	900
LEFB16□T-900□	1095.5	906	1035	14	6	900
LEFB16□T-1000□	1195.5	1006	1135	16	7	1050

LEFB25

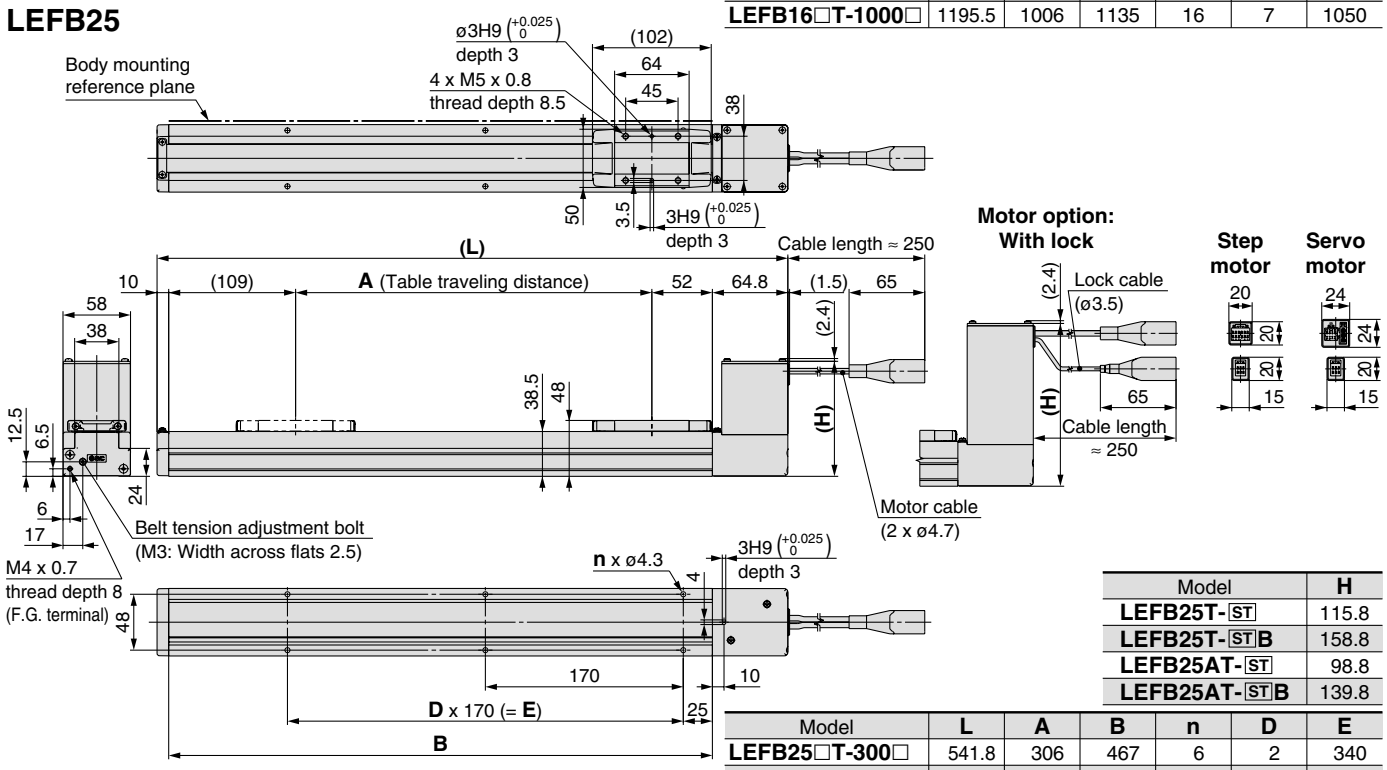

Model	H
LEFB25T-ST	115.8
LEFB25T-STB	158.8
LEFB25AT-ST	98.8
LEFB25AT-STB	139.8

Model	L	A	B	n	D	E
LEFB25□T-300□	541.8	306	467	6	2	340
LEFB25□T-500□	741.8	506	667	8	3	510
LEFB25□T-600□	841.8	606	767	10	4	680
LEFB25□T-700□	941.8	706	867	10	4	680
LEFB25□T-800□	1041.8	806	967	12	5	850
LEFB25□T-900□	1141.8	906	1067	14	6	1020
LEFB25□T-1000□	1241.8	1006	1167	14	6	1020
LEFB25□T-1200□	1441.8	1206	1367	16	7	1190
LEFB25□T-1500□	1741.8	1506	1667	20	9	1530
LEFB25□T-1800□	2041.8	1806	1967	24	11	1870
LEFB25□T-2000□	2241.8	2006	2167	26	12	2040

Dimensions: Belt Drive

LEFB32

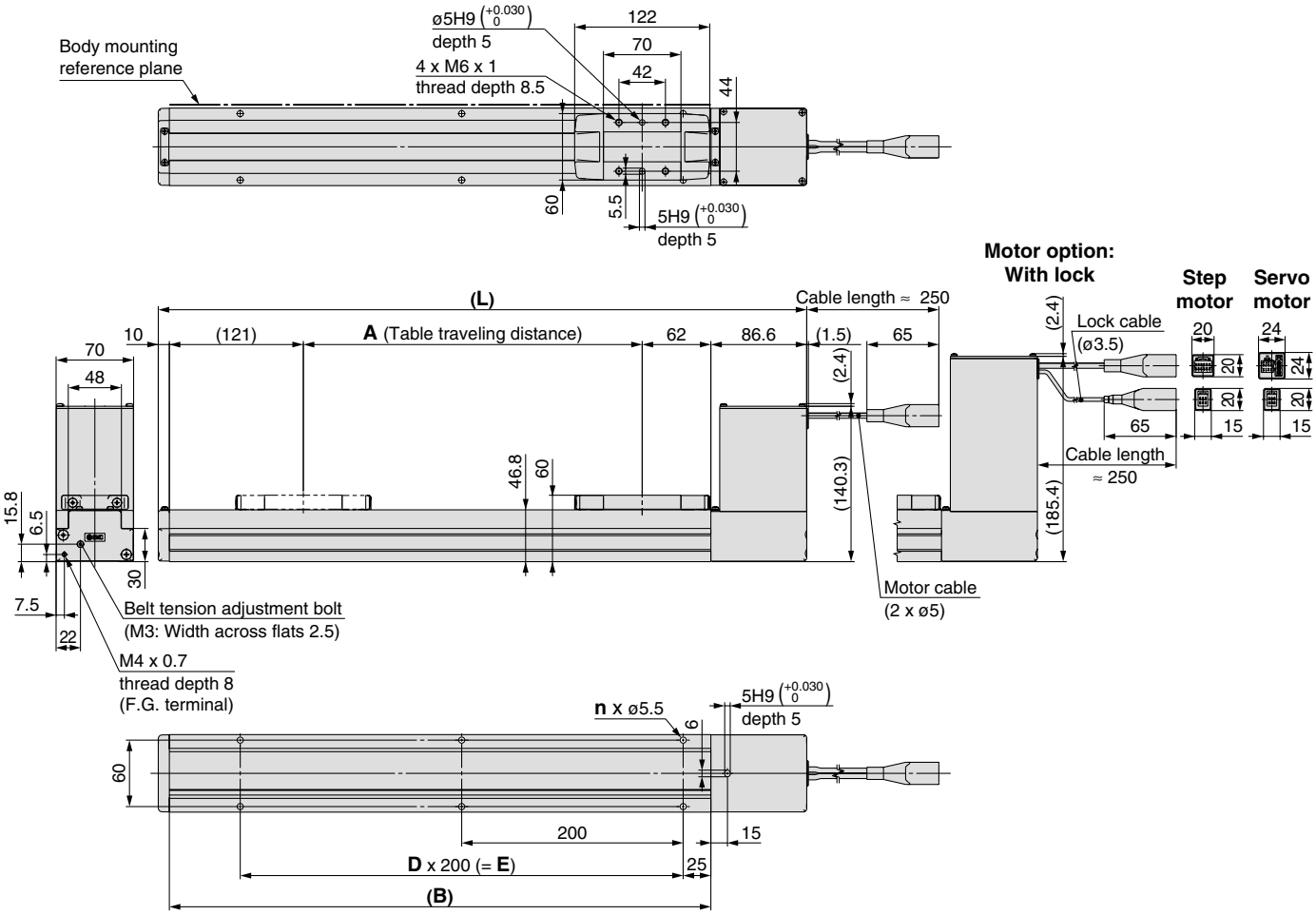

Model	L	A	B	n	D	E
LEFB32□T-300□	585.6	306	489	6	2	400
LEFB32□T-500□	785.6	506	689	8	3	600
LEFB32□T-600□	885.6	606	789	8	3	600
LEFB32□T-700□	985.6	706	889	10	4	800
LEFB32□T-800□	1085.6	806	989	10	4	800
LEFB32□T-900□	1185.6	906	1089	12	5	1000
LEFB32□T-1000□	1285.6	1006	1189	12	5	1000
LEFB32□T-1200□	1485.6	1206	1389	14	6	1200
LEFB32□T-1500□	1785.6	1506	1689	18	8	1600
LEFB32□T-1800□	2085.6	1806	1989	20	9	1800
LEFB32□T-2000□	2285.6	2006	2189	22	10	2000

Series LEF
Electric Actuator/Slider Type Specific Product Precautions 1

Be sure to read before handling. Refer to the back cover for Safety Instructions and the operation manual for Electric Actuators Precautions.
Please download it via our website. http://www.smcworld.com/

Design

⚠Caution

1. **Do not apply a load in excess of the operating limit.**
   A product should be selected based on the maximum load and allowable moment. If the product is used outside of the operating limit, eccentric load applied to the guide will become excessive and have adverse effects such as creating play at the guide, degraded accuracy and shortened product life.
2. **Do not use the product in applications where excessive external force or impact force is applied to it.**
   This can cause failure.

Handling

⚠Caution

1. **In position in the step data should be over 0.5.**
   If in position is 0.5 or less, completion signal of in position may not be output.
2. **INP output signal**
   1) Positioning operation
      When the product comes within the set range by step data [In pos], the INP (In position) output signal is turned on.
      Initial value: Set to [0.50] or higher.

Handling

⚠Caution

3. **Never hit at the stroke end other than returning to the original position.**
   The internal stopper can be broken.

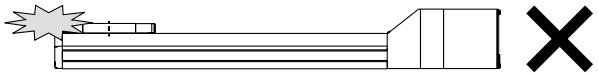

   Handle the actuator with care especially when it is used in the vertical direction.
4. **The positioning force should be the initial value.**
   If the positioning force is set below the initial value, it may cause an alarm.
5. **Actual speed of the product can be changed by load.**
   When selecting a product, check the catalog for the instructions regarding selection and specifications.
6. **Do not apply a load, impact or resistance in addition to a transferred load during returning to the original position.**
   Otherwise, the original position can be displaced since it is based on detected motor torque.
7. **Do not dent, scratch or cause other damage to the body and table mounting surfaces.**
   It may cause a loss of parallelism in the mounting surfaces, looseness in the guide unit, an increase in sliding resistance or other problems.
8. **When attaching a workpiece, do not apply strong impact or large moment.**
   If an external force over the allowable moment is applied, it may cause looseness in the guide unit, an increase in sliding resistance or other problems.
9. **Keep the flatness of mounting surface 0.1 mm or less.**
   Insufficient flatness of a workpiece or base mounted on the body of the product can cause play at the guide and increased sliding resistance.
10. **When mounting the product, keep the 40 mm or more for bending the cable.**
11. **Do not hit the table with the workpiece in the positioning operation and positioning range.**

Series LEF
Electric Actuator/Slider Type Specific Product Precautions 2

Be sure to read before handling. Refer to the back cover for Safety Instructions and the operation manual for Electric Actuators Precautions.
Please download it via our website. http://www.smcworld.com/

Handling

⚠Caution

12. When mounting the product, use screws with appropriate length and tighten them by applying appropriate torque.

Tightening with higher torque than the specified range may cause malfunction while the tightening with lower torque can cause the displacement of gripping position or dropping a workpiece.

Body fixed

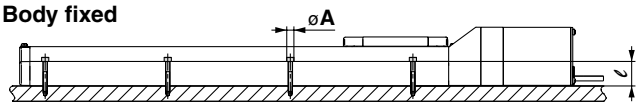

Model	Bolt	øA (mm)	ℓ (mm)
LEF□16	M3	3.4	20
LEF□25	M4	4.3	24
LEF□32	M5	5.5	30

Workpiece fixed

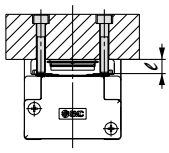

Model	Bolt	Max. tightening torque (N·m)	ℓ (Max. screw-in depth mm)
LEF□16	M4	2.1	6
LEF□25	M5	5.7	8
LEF□32	M6	7.4	9

To prevent the workpiece fixing bolts from touching the body, use bolts that are 0.5 mm or shorter than the maximum screw-in depth. If long bolts are used, they can touch the body and cause malfunction, etc.

13. Do not operate by fixing the table and moving the actuator body.

14. Belt drive actuator cannot be used for vertically mounted applications.

15. Check the specifications for the minimum speed of each actuator.

Otherwise, unexpected malfunctions, such as knocking, may occur.

16. In the case of the belt driven actuator, vibration may occur during operation at speeds within the actuator specification, this could be caused by the operating conditions. Change the speed setting to a speed that does not cause vibration.

⚠Warning

1. In case of the actuator with servo motor (24 VDC), "motor phase detection step" is done by inputting the servo on signal just after controller power is on.

This motor phase detection step operates the table to the maximum distance of the lead of the screw. (The motor rotates in the reverse direction if the table hits an obstacle such as the end damper.) Take this motor phase detection step into consideration for installation and operation of this actuator.

Maintenance

⚠Warning

Maintenance frequency

Perform maintenance according to the below table.

Frequency	Appearance check	Internal check	Check belt
Inspection before daily operation	○	—	—
Inspection every 6 months/1000 km/ 5 million cycles*	○	○	○

* Select whichever comes sooner.

- **Items for visual appearance check**
  1. Loose set screws, Abnormal dirt
  2. Check of flaw and cable joint
  3. Vibration, Noise
- **Items for internal check**
  1. Lubricant condition on moving parts.
  2. Loose or mechanical play in fixed parts or fixing screws.
- **Items for belt check**

Stop operation immediately and replace the belt when belt appear to be below. Further, ensure your operating environment and conditions satisfy the requirements specified for the product.

a. Tooth shape canvas is worn out.
Canvas fiber becomes fuzzy. Rubber is removed and the fiber becomes whitish. Lines of fibers become unclear.

b. Peeling off or wearing of the side of the belt
Belt corner becomes round and frayed thread sticks out.

c. Belt partially cut
Belt is partially cut. Foreign matter caught in teeth other than cut part causes flaw.

d. Vertical line of belt teeth
Flaw which is made when the belt runs on the flange.

e. Rubber back of the belt is softened and sticky.

f. Crack on the back of the belt

Step Motor Controller
(Servo/24 VDC)

Series LECP6

Servo Motor Controller
(24 VDC)

Series LECA6

● Electric actuator/ Slider type

● I/O cable

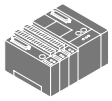

PLC

Power supply for I/O signal 24 VDC

Please prepare PLC and 24 VDC power supply for I/O signal.

● Controller

To CN5

To CN4

To CN3

To CN2

To CN1

Actuator cable ●

Controller power supply 24 VDC

(Please prepare power cables and 24 VDC input power supplies [power supplies other than the inrush current prevention type] for the cotroller.)

● Power supply plug
(accessory)

Options

● **Controller setting software**
(Communication cable, USB cable and conversion unit are included.)

● Conversion unit

● Communication cable

USB cable ●
(A-miniB type)

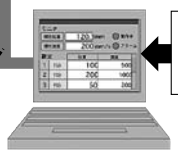

Software for input setting data of controller

PC

or

● **Teaching box**
(with 3 m cable)

Equipment for input setting data of controller

Step Motor Controller (Servo/24 VDC)
Series LECP6

Servo Motor Controller (24 VDC)
Series LECA6

Series LECP6 Series LECA6

How to Order

⚠Caution

Note 1) CE-compliant products

① EMC compliance was tested by combining the electric actuator LEF series and the controller LEC series. The EMC depends on the configuration of the customer's control panel and the relationship with other electrical equipment and wiring. Therefore conformity to the EMC directive cannot be certified for SMC components incorporated into the customer's equipment under actual operating conditions. As a result it is necessary for the customer to verify conformity to the EMC directive for the machinery and equipment as a whole.

② For the LECA6 series (servo motor controller), EMC compliance was tested by installing a noise filter set (LEC-NFA). Refer to page 28 for the noise filter set. Refer to the LECA Operation Manual for installation.

LE C P 6 N □ □ – □

Actuator

Controller

Compatible motor

P	Step motor (Servo/24 VDC)
A	Servo motor (24 VDC) Note 1)

Number of step data

6	64 points

Parallel I/O type

N	NPN
P	PNP

I/O cable length

Nil	Without cable
1	1.5 m
3	3 m
5	5 m

Option

Nil	Screw mounting
D Note 2)	DIN rail mounting

Note 2) DIN rail is not included. Order it separately.

Actuator part number

(Except cable specifications and actuator options)
Example: Enter [LEFS16A-400] for LEFS16A-400-R16N1

∗ When controller equipped type (-P6□□) is selected when ordering the LE series, you do not need to order this controller.

The controller is sold as single unit after the compatible actuator is set.

Confirm that the combination of the controller and the actuator is compatible.

<Be sure to check the following before use.>

① Check that actuator label for model number. This matches the controller.

② Check Parallel I/O configuration matches (NPN or PNP).

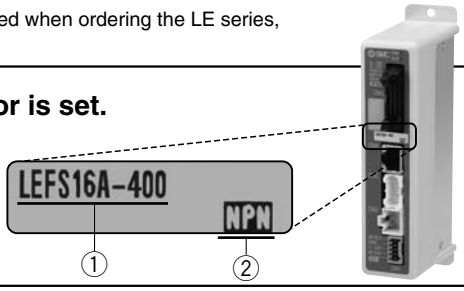

Specifications

Basic Specifications

Item	LECP6	LECA6
Compatible motor	Unipolar connection type 2-phase HB step motor	AC servo motor
Power supply Note 1)	Power voltage: 24 VDC ±10% Current consumption: 3 A (Peak 5 A) Note 2) [Including motor drive power, control power, stop, lock release]	Power voltage: 24 VDC ±10% Current consumption: 3 A (Peak 10 A) Note 2) [Including motor drive power, control power, stop, lock release]
Parallel input	11 inputs (Photo-coupler isolation)	
Parallel output	13 outputs (Photo-coupler isolation)	
Compatible encoder	A/B phase, Line receiver input Resolution 800 p/r	A/B/Z phase, Line receiver input Resolution 800 p/r
Serial communication	RS485 (Modbus protocol compliant)	
Memory	EEPROM	
LED indicator	LED (Green/Red) one of each	
Lock control	Forced-lock release terminal	
Cable length (m)	I/O cable: 5 or less Actuator cable: 20 or less	
Cooling system	Natural air cooling	
Operating temperature range (°C)	0 to 40 (No condensation and freezing)	
Operating humidity range (%)	35 to 85 (No condensation and freezing)	
Storage temperature range (°C)	–10 to 60 (No condensation and freezing)	
Storage humidity range (%)	35 to 85 (No condensation and freezing)	
Insulation resistance (MΩ)	Between the housing (radiation fin) and SG terminal 50 (500 VDC)	
Weight (g)	150 (Screw mounting) 170 (DIN rail mounting)	

Note 1) Do not use the power supply of "inrush current prevention type" for the controller power supply.
Note 2) The power consumption changes depending on the actuator model. Refer to the specifications of actuator for more details.

How to Mount

a) Screw mounting (LEC□6□□-□)
(Installation with two M4 screws)

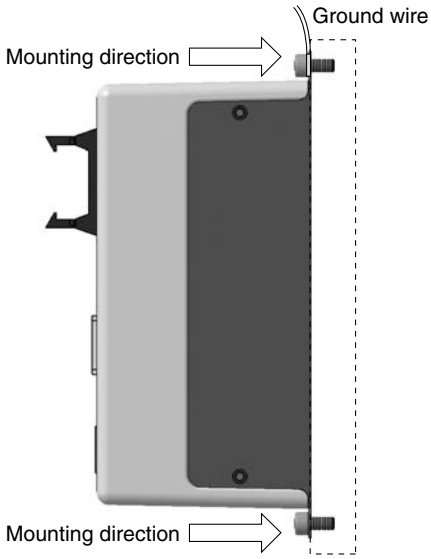

b) DIN rail mounting (LEC□6□□D-□)
(Installation with the DIN rail)

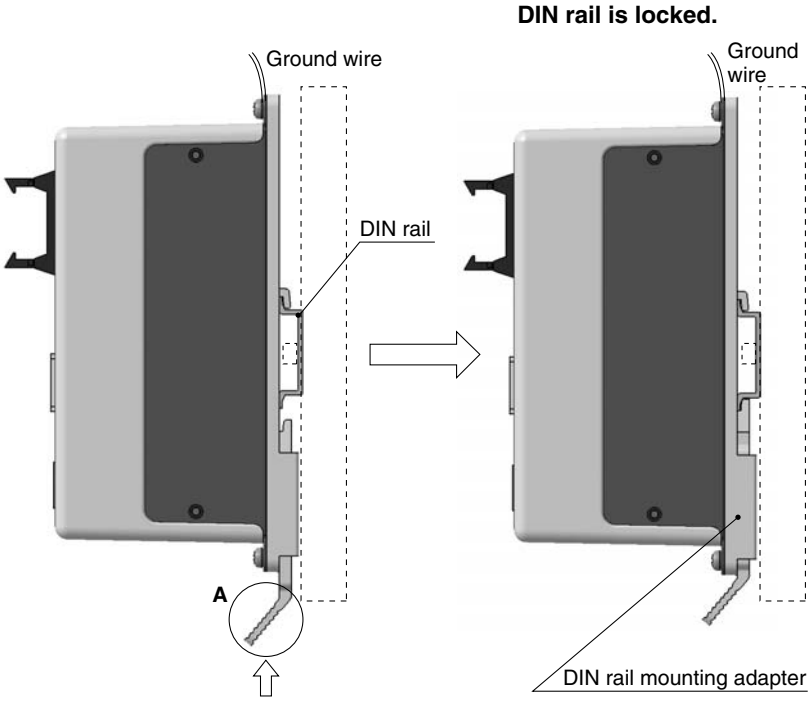

Hook the controller on the DIN rail and press the lever of section **A** in the arrow direction to lock it.

DIN rail
AXT100-DR-□

∗ For □, enter a number from the "No." line in the below table.
Refer to the dimensions on page 22 for the mounting dimensions.

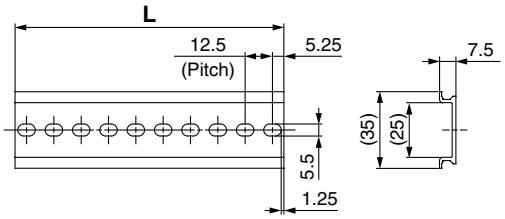

L Dimensions

No.	1	2	3	4	5	6	7	8	9	10	11	12	13	14	15	16	17	18	19	20
L dimension	23	35.5	48	60.5	73	85.5	98	110.5	123	135.5	148	160.5	173	185.5	198	210.5	223	235.5	248	260.5

No.	21	22	23	24	25	26	27	28	29	30	31	32	33	34	35	36	37	38	39	40
L dimension	273	285.5	298	310.5	323	335.5	348	360.5	373	385.5	398	410.5	423	435.5	448	460.5	473	485.5	498	510.5

DIN rail mounting adapter
LEC-D0 (with 2 mounting screws)

This should be used when the DIN rail mounting adapter is mounted onto the screw mounting type controller afterwards.

Dimensions

a) Screw mounting (LEC□6□□-□)

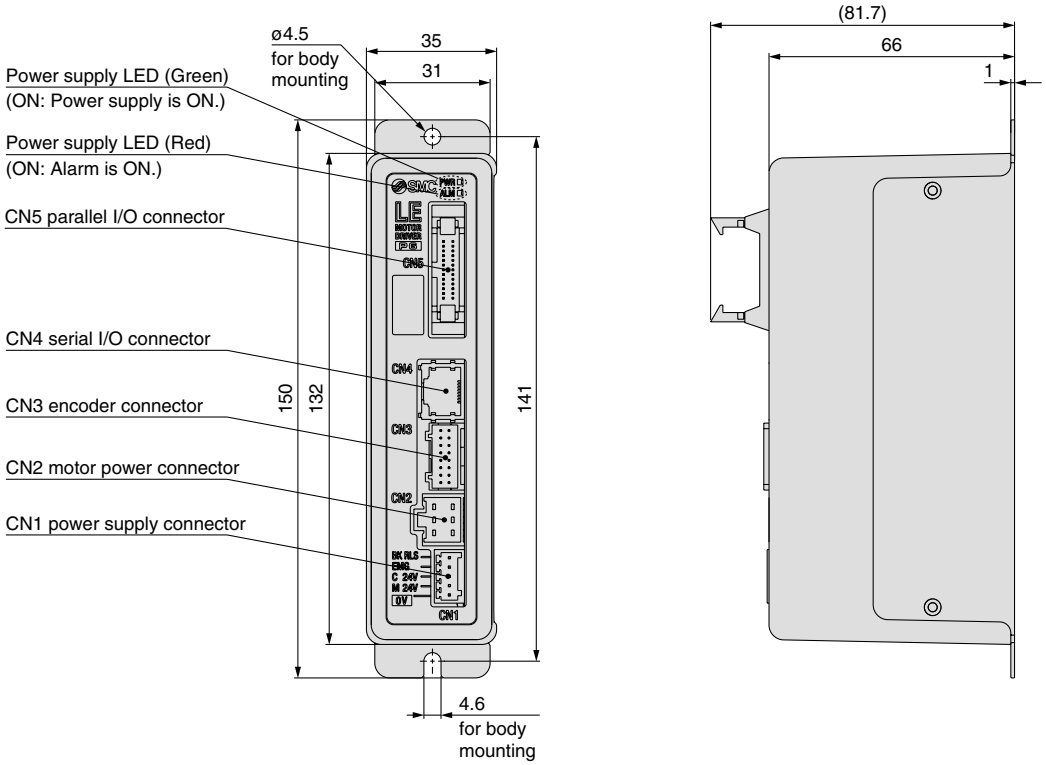

b) DIN rail mounting (LEC□6□□D-□)

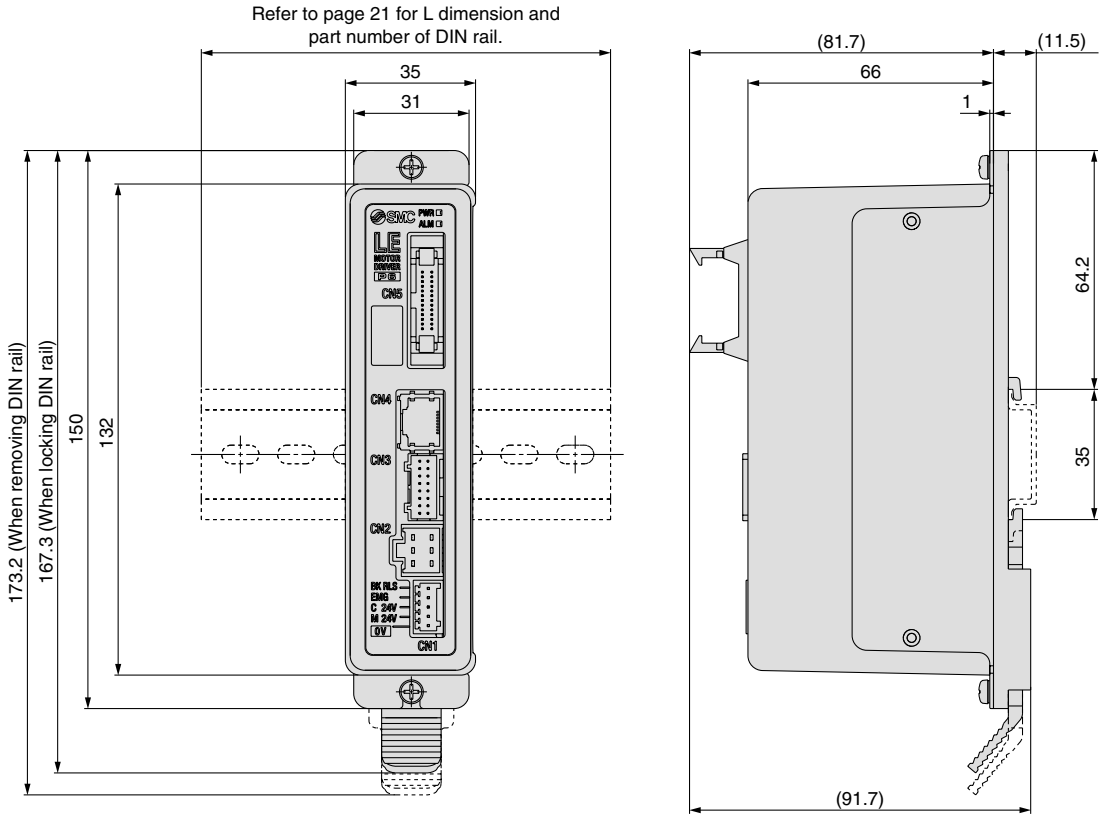

Note) When two or more controllers are used, keep the interval between them 10 mm or more.

Wiring Example 1

Power Supply Connector: CN1

∗ Power supply plug is an accessory.

CN1 Power Supply Connector Terminal for LECP6 (Phoenix Contact FK-MC0.5/5-ST-2.5)

Terminal name	Function	Function details
0V	Common supply (–)	M24V terminal/C24V terminal/EMG terminal/BK RLS terminal are common (–).
M24V	Motor power supply (+)	This is the motor power supply (+) that is supplied to the controller.
C24V	Control power supply (+)	This is the control power supply (+) that is supplied to the controller.
EMG	Stop (+)	This is the input (+) that releases the stop.
BK RLS	Lock release (+)	This is the input (+) that releases the lock.

Power supply plug for LECP6

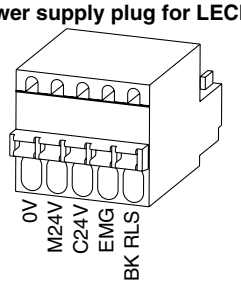

CN1 Power Supply Connector Terminal for LECA6 (Phoenix Contact FK-MC0.5/7-ST-2.5)

Terminal name	Function	Function details
0V	Common supply (–)	M24V terminal/C24V terminal/EMG terminal/BK RLS terminal are common (–).
M24V	Motor power supply (+)	This is the motor power supply (+) that is supplied to the controller.
C24V	Control power supply (+)	This is the control power supply (+) that is supplied to the controller.
EMG	Stop (+)	This is the input (+) that releases the stop.
BK RLS	Lock release (+)	This is the input (+) that releases the lock.
RG+	Regenerative output 1	These are the regenerative output terminals for external connection. (It is not necessary to connect them in the combination with standard specification LEF series.)
RG–	Regenerative output 2	

Power supply plug for LECA6

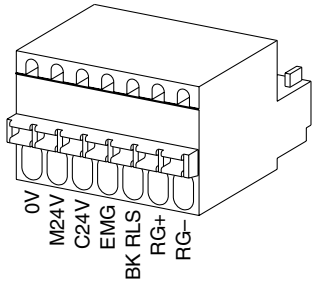

Wiring Example 2

Parallel I/O Connector: CN5

∗ When you connect a PLC, etc., to the CN5 parallel I/O connector, please use the I/O cable (LEC-CN5-□).
∗ The wiring should be changed depending on the type of the parallel I/O (NPN or PNP). Please wire referring to the following diagram.

Wiring diagram

LEC□6N□□-□ (NPN)

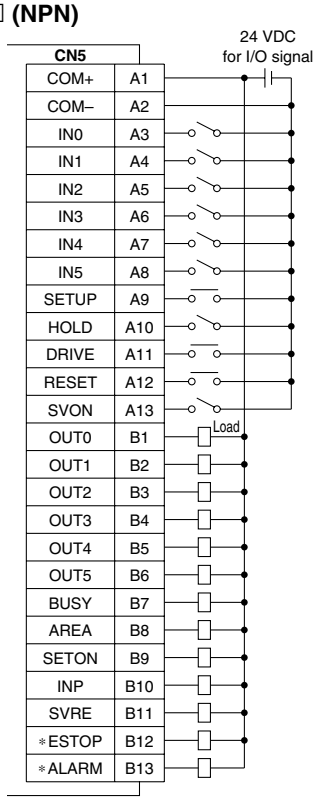

LEC□6P□□-□ (PNP)

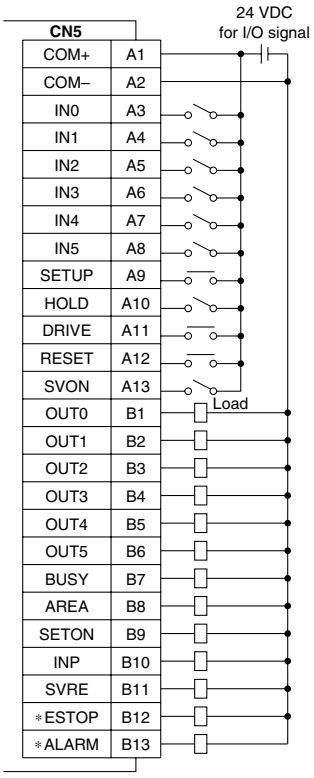

Input Signal

Name	Contents
COM+	Connects the power supply 24 V for input/output signal
COM–	Connects the power supply 0 V for input/output signal
IN0 to IN5	Step data specified Bit No. (Input is instructed in the combination of IN0 to 5.)
SETUP	Instruction to return to the original position
HOLD	Operation is temporarily stopped.
DRIVE	Instruction to drive
RESET	Alarm reset and operation interruption
SVON	Servo ON instruction

Output Signal

Name	Contents
OUT0 to OUT5	Outputs the step data No. during operation
BUSY	Outputs when the actuator is moving
AREA	Outputs within the step data area output setting range
SETON	Outputs when returning to the original position
INP	Outputs when target position or target force is reached (Turns on when the positioning or pushing is completed.)
SVRE	Outputs when servo is on
∗ESTOP Note)	Not output when EMG stop is instructed
∗ALARM Note)	Not output when alarm is generated

Note) These signals are output when the power supply of the controller is ON. (N.C.)

Step Data Setting

1. Step data setting for positioning

In this setting, the actuator moves toward and stops at the target position. The following diagram shows the setting items and operation. The setting items and set values for this operation are stated below.

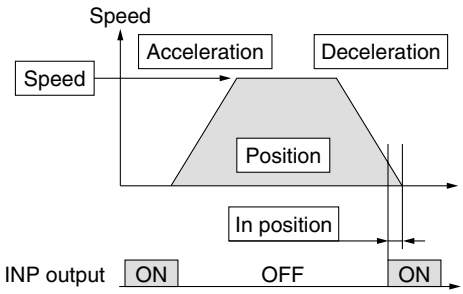

◎: Need to be set.
○: Need to be adjusted as required.
—: Setting is not required.

Step Data (Positioning)

Necessity	Item	Description
◎	Movement MOD	When the absolute position is required, set Absolute. When the relative position is required, set Relative.
◎	Speed	Transfer speed to the target position
◎	Position	Target position
○	Acceleration	Parameter which defines how rapidly the actuator reaches the speed set. The higher the set value, the faster it reaches the speed set.
○	Deceleration	Parameter which defines how rapidly the actuator comes to stop. The higher the set value, the quicker it stops.
◎	Pushing force	Set 0. (If values 1 to 100 are set, the operation will be changed to the pushing operation.)
—	Trigger LV	Setting is not required.
—	Pushing speed	Setting is not required.
○	Positioning force	Max. torque during the positioning operation (No specific change is required.)
○	Area 1, Area 2	Condition that turns on the AREA output signal.
○	In position	Condition that turns on the INP output signal. When the actuator enters the range of [in position], the INP output signal turns on. (It is unnecessary to change this from the initial value.) When it is necessary to output the arrival signal before the operation is completed, make the value larger.

Signal Timing

Return to Origin

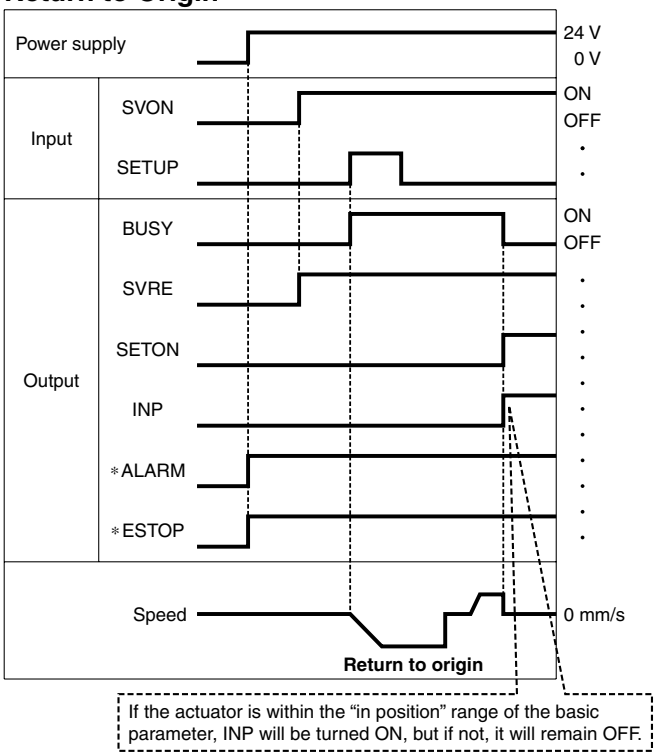

∗ "∗ALARM" and "∗ESTOP" are expressed as negative-logic circuit.

Positioning Operation

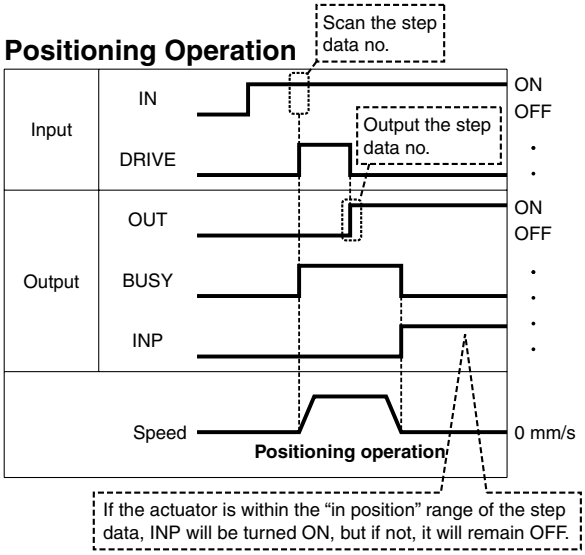

∗ "OUT" is output when "DRIVE" is changed from ON to OFF.
(When power supply is applied, "DRIVE" or "RESET" is turned ON or "∗ESTOP" is turned OFF, all of the "OUT" outputs are turned OFF.)

HOLD

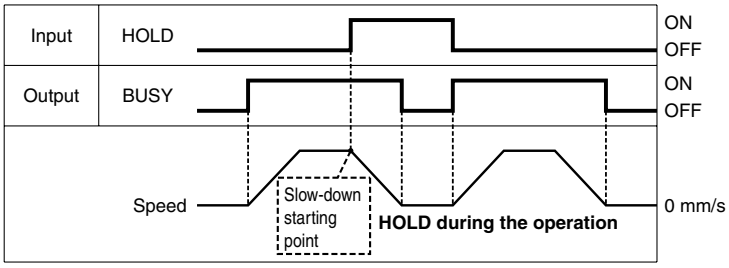

∗ When the actuator is in the positioning range in the pushing operation, it does not stop even if HOLD signal is input.

Reset

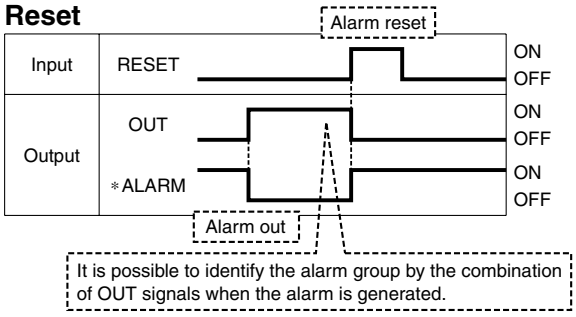

∗ "∗ALARM" and "∗ESTOP" are expressed as negative-logic circuit.

Options

[Actuator cable for step motor (Servo/24 VDC)]

LE – CP – 1

Cable length (L)

1	1.5 m
3	3 m
5	5 m
8	8 m*
A	10 m*
B	15 m*
C	20 m*

* Produced upon receipt of order

LE-CP-$^{1}_{3}_{5}$/Cable length: 1.5 m, 3 m, 5 m

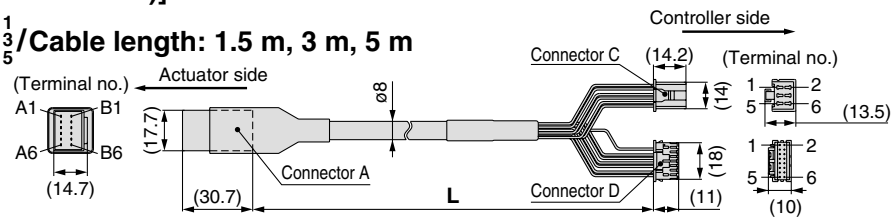

LE-CP-$^{8}_{A}^{B}_{C}$/Cable length: 8 m, 10 m, 15 m, 20 m
(* Produced upon receipt of order)

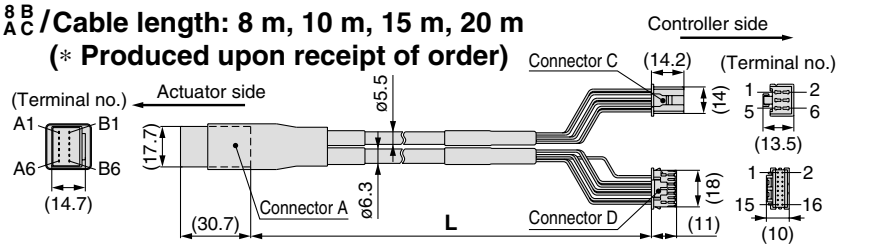

Circuit	Connector A terminal no.
A	B-1
$\overline{A}$	A-1
B	B-2
$\overline{B}$	A-2
COM-A/COM	B-3
COM-B/–	A-3
Vcc	B-4
GND	A-4
$\overline{A}$	B-5
A	A-5
$\overline{B}$	B-6
B	A-6

Cable color	Connector C terminal no.
Brown	2
Red	1
Orange	6
Yellow	5
Green	3
Blue	4

Shield

Cable color	Connector D terminal no.
Brown	12
Black	13
Red	7
Black	6
Orange	9
Black	8
—	3

[Actuator cable with lock and sensor for step motor (Servo/24 VDC)]

LE – CP – 1 – B

Cable length (L)

1	1.5 m
3	3 m
5	5 m
8	8 m*
A	10 m*
B	15 m*
C	20 m*

* Produced upon receipt of order

With lock and sensor

LE-CP-$^{1}_{3}_{5}$/Cable length: 1.5 m, 3 m, 5 m

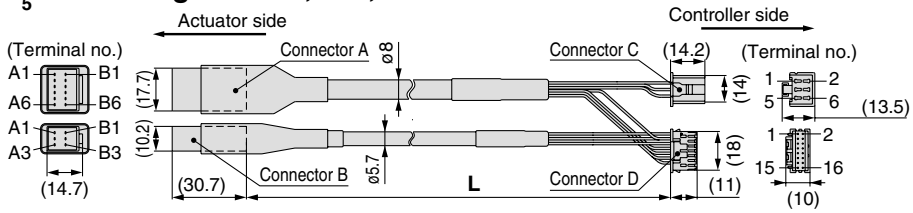

LE-CP-$^{8}_{A}^{B}_{C}$/Cable length: 8 m, 10 m, 15 m, 20 m (* Produced upon receipt of order)

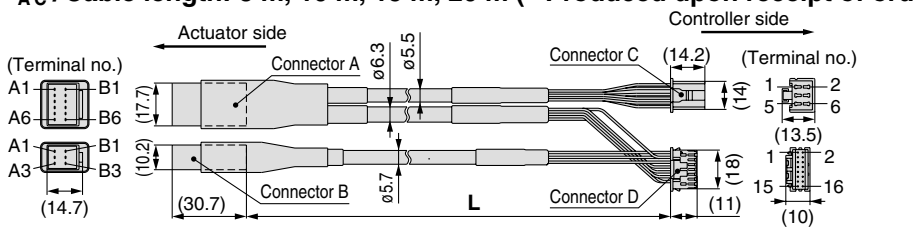

Circuit	Connector A terminal no.
A	B-1
$\overline{A}$	A-1
B	B-2
$\overline{B}$	A-2
COM-A/COM	B-3
COM-B/–	A-3
Vcc	B-4
GND	A-4
$\overline{A}$	B-5
A	A-5
$\overline{B}$	B-6
B	A-6

Circuit	Connector B terminal no.
Lock (+)	B-1
Lock (–)	A-1
Sensor (+) Note)	B-3
Sensor (–) Note)	A-3

Cable color	Connector C terminal no.
Brown	2
Red	1
Orange	6
Yellow	5
Green	3
Blue	4

Shield

Cable color	Connector D terminal no.
Brown	12
Black	13
Red	7
Black	6
Orange	9
Black	8
—	3

Red	4
Black	5
Brown	1
Blue	2

Note) This is not used for the LEF series.

[Actuator cable for servo motor (24 VDC)]

LE − CA − 1

Cable length (L)

1	1.5 m
3	3 m
5	5 m
8	8 m*
A	10 m*
B	15 m*
C	20 m*

∗ Produced upon receipt of order

LE-CA-□

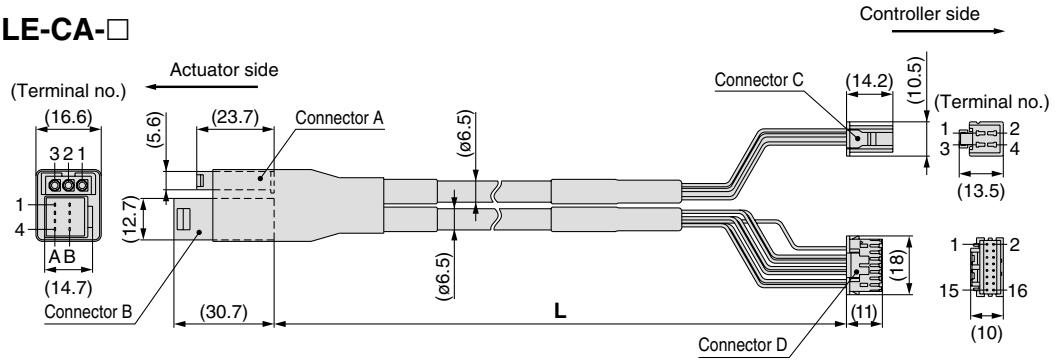

Circuit	Connector A terminal no.
U	1
V	2
W	3

Cable color	Connector C terminal no.
Red	1
White	2
Black	3

Circuit	Connector B terminal no.
Vcc	B-1
GND	A-1
$\overline{A}$	B-2
A	A-2
$\overline{B}$	B-3
B	A-3
$\overline{Z}$	B-4
Z	A-4

Shield

Connection of shield material

Cable color	Connector D terminal no.
Brown	12
Black	13
Red	7
Black	6
Orange	9
Black	8
Yellow	11
Black	10
—	3

[Actuator cable with lock and sensor for servo motor (24 VDC)]

LE − CA − 1 − B

Cable length (L)

1	1.5 m
3	3 m
5	5 m
8	8 m*
A	10 m*
B	15 m*
C	20 m*

∗ Produced upon receipt of order

With lock and sensor

LE-CA-□-B

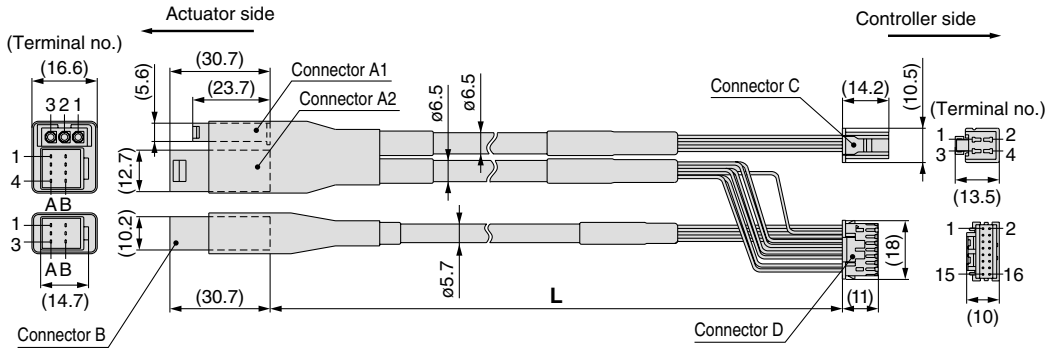

Circuit	Connector A1 terminal no.
U	1
V	2
W	3

Cable color	Connector C terminal no.
Red	1
White	2
Black	3

Circuit	Connector A2 terminal no.
Vcc	B-1
GND	A-1
$\overline{A}$	B-2
A	A-2
$\overline{B}$	B-3
B	A-3
$\overline{Z}$	B-4
Z	A-4

Shield

Connection of shield material

Cable color	Connector D terminal no.
Brown	12
Black	13
Red	7
Black	6
Orange	9
Black	8
Yellow	11
Black	10
—	3

Circuit	Connector B terminal no.
Lock (+)	B-1
Lock (–)	A-1
Sensor (+) Note)	B-3
Sensor (–) Note)	A-3

Cable color	Connector D terminal no.
Red	4
Black	5
Brown	1
Black	2

Note) This is not used for the LEF series.

Options

[I/O cable]

LEC − CN5 − 1

Cable length (L)

1	1.5 m
3	3 m
5	5 m

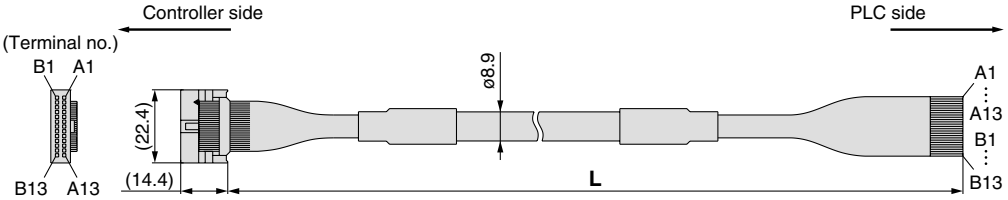

∗ Conductor size: AWG28

Connector pin No.	Cable color	Dot mark	Dot color
A1	Light brown	■	Black
A2	Light brown	■	Red
A3	Yellow	■	Black
A4	Yellow	■	Red
A5	Light green	■	Black
A6	Light green	■	Red
A7	Gray	■	Black
A8	Gray	■	Red
A9	White	■	Black
A10	White	■	Red
A11	Light brown	■ ■	Black
A12	Light brown	■ ■	Red
A13	Yellow	■ ■	Black

Connector pin No.	Cable color	Dot mark	Dot color
B1	Yellow	■ ■	Red
B2	Light green	■ ■	Black
B3	Light green	■ ■	Red
B4	Gray	■ ■	Black
B5	Gray	■ ■	Red
B6	White	■ ■	Black
B7	White	■ ■	Red
B8	Light brown	■ ■ ■	Black
B9	Light brown	■ ■ ■	Red
B10	Yellow	■ ■ ■	Black
B11	Yellow	■ ■ ■	Red
B12	Light green	■ ■ ■	Black
B13	Light green	■ ■ ■	Red
—	Shield		

[Noise filter set for Servo motor (24 VDC)]

LEC − NFA

Contents of the set: 2 noise filters (Produced by WURTH ELEKTRONIK: 74271222)

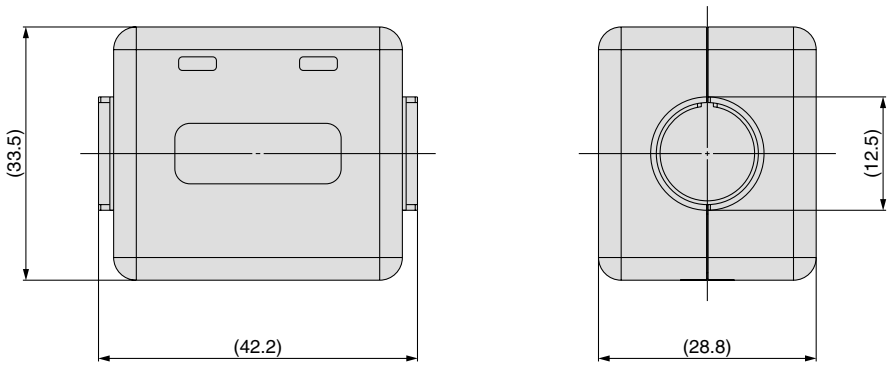

∗ Refer to the LECA6 series Operation Manual for installation.

Controller Setting Software/LEC-W1

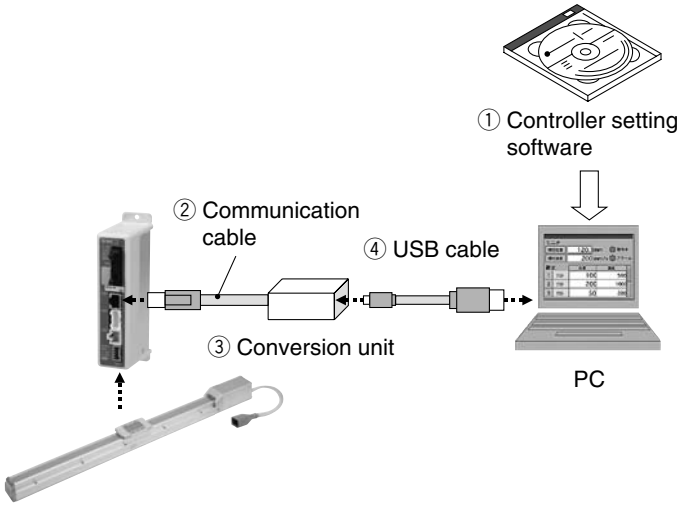

How to Order

LEC－W1

Controller setting software
(Japanese and English are available.)

Contents

① **Controller setting software (CD-ROM)**
② **Communication cable**
(Cable between the controller and the conversion unit)
③ **Conversion unit**
④ **USB cable**
(Cable between the PC and the conversion unit)

Hardware Requirements

PC/AT compatible machine installed with Windows XP and equipped with USB1.1 or USB2.0 ports.

∗ Windows® and Windows XP® are registered trademarks of Microsoft Corporation.

Screen Example

Easy mode screen example

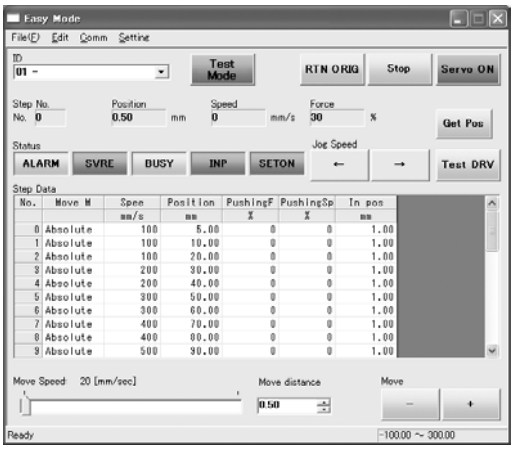

Easy operation and simple setting

- Allowing to set and display actuator step data such as position, speed, force, etc.
- Setting of step data and testing of the drive can be performed on the same page.
- Can be used to jog and move at a constant rate.

Normal mode screen example

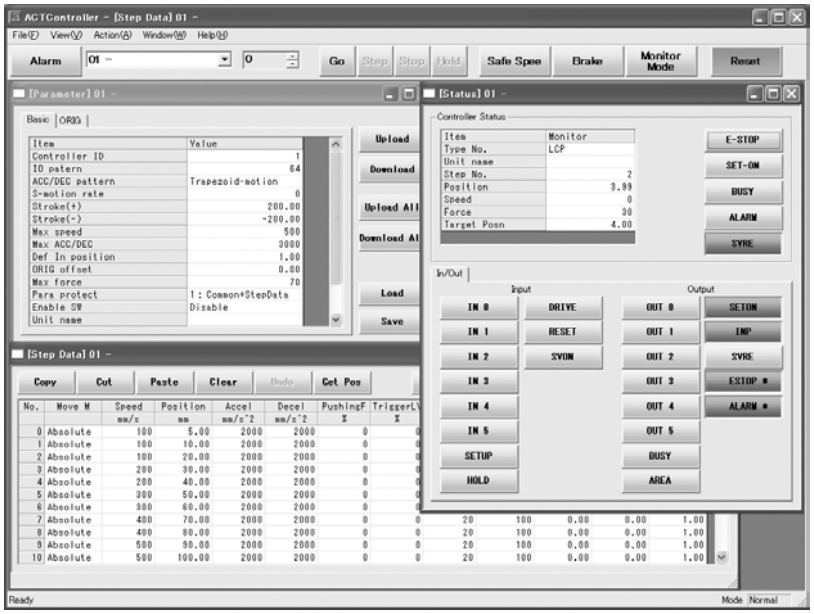

Detail setting

- Step data can be set in detail.
- Signals and terminal status can be monitored.
- Parameters can be set.
- JOG and constant rate movement, return to origin, test operation and testing of compulsory output can be performed.

Series LEC
Teaching Box/LEC-T1

How to Order

LEC-T1-3 J G

Teaching box

Cable length

3	3 m

Initial language

J	Japanese
E	English

Stop switch

G	Equipped with stop switch

Enable switch

Nil	None
S	Equipped with enable switch

∗ Interlock switch for jog test function

Standard functions
- **Chinese character display**
- **Stop switch is provided.**

Option
- **Enable switch is provided.**

Specifications

Item	Description
Switch	Stop switch, Enable switch (Option)
Cable length	3 m
Enclosure	IP64 (Except connector)
Operating temperature range (°C)	5 to 50 (No condensation)
Operating humidity range (%)	35 to 85
Weight (g)	350 (Except cable)

∗ The EMC compliance for the teaching box was tested with LECP6 controller and applicable actuator only.

Easy Mode

Function	Description
Step data	• Setting of step data
Jog	• Jog operation • Return to origin
Test	• 1 step operation • Return to origin
Monitor	• Display of axis and step data No. • Display of two items selected from Position, Speed, Force.
Alarm	• Display of active alarm • Alarm reset
TB setting	• Reconnection of axis • Setting of easy/normal mode • Setting of step data and selection of item for monitoring function

Menu Operations Flowchart

Menu
- Data
- Monitor
- Jog
- Test
- Alarm
- TB setting

Data
Step data No.
Setting of two items selected below
(Position, Speed, Force, Acceleration, Deceleration)

Monitor
Display of step No.
Display of two items selected below
(Position, Speed, Force)

Jog
Return to origin
Jog operation

Test
1 step operation

Alarm
Display of active alarm
Alarm reset

TB setting
Reconnect
Easy/Normal
Set item

Normal Mode

Function	Description
Step data	• Step data setting
Parameter	• Parameters setting
Test	• Jog operation/Constant rate movement • Return to origin • Test drive (Specify a maximum of 5 step data and operate.) • Compulsory output (Compulsory signal output, Compulsory terminal output)
Monitor	• Drive monitor • Output signal monitor • Input signal monitor • Output terminal monitor • Input terminal monitor
Alarm	• Active alarm display (Alarm reset) • Alarm log record display
File	• Data saving Save the step data and parameters of the controller which is being used for communication (it is possible to save four files, with one set of step data and parameters defined as one file). • Load to controller Loads the data which is saved in the teaching box to the controller which is being used for communication. • Delete the saved data.
TB setting	• Display setting (Easy/Normal mode) • Language setting (Japanese/English) • Backlight setting • LCD contrast setting • Beep sound setting • Max. connection axis • Distance unit (mm/inch)
Reconnect	• Reconnection of axis

Menu Operations Flowchart

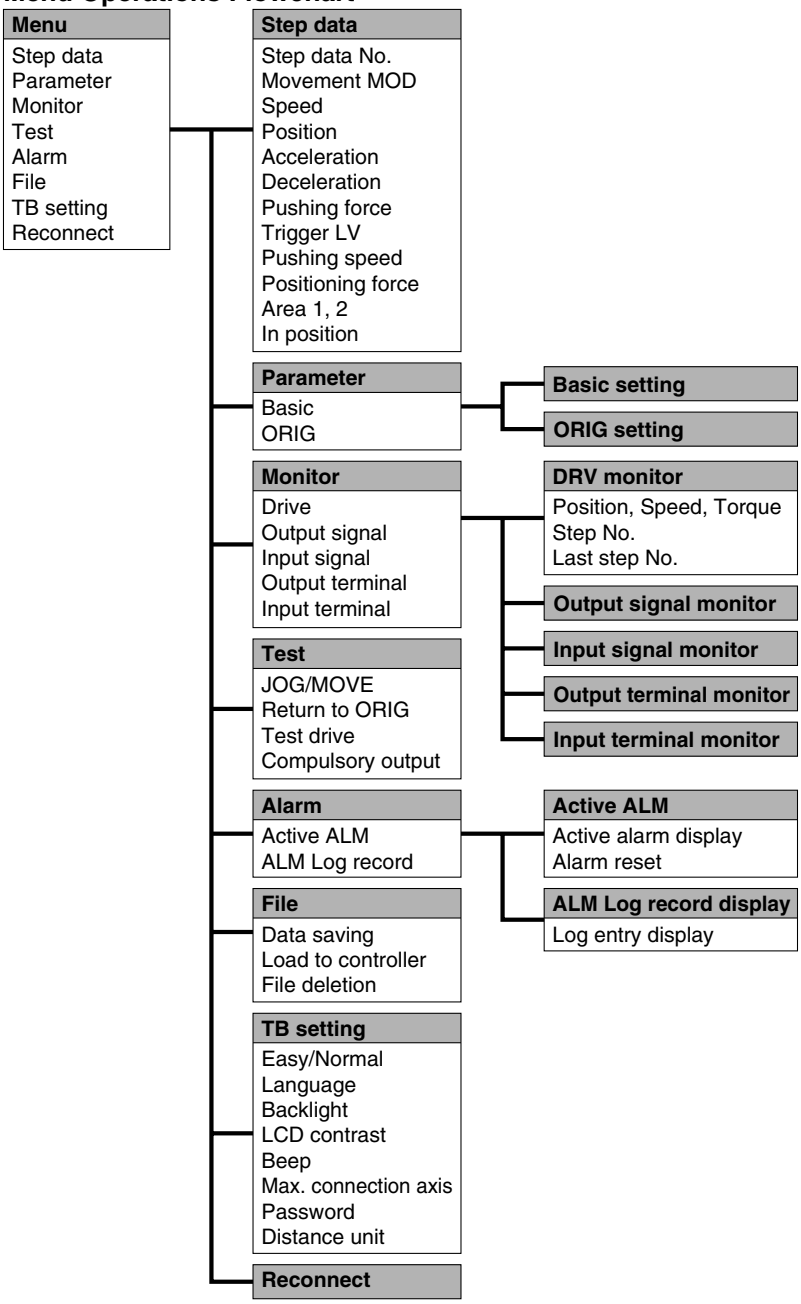

Dimensions

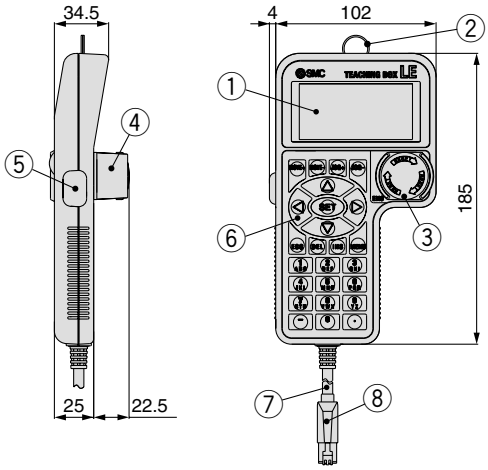

No.	Description	Function
1	**LCD**	A screen of liquid crystal display (with backlight)
2	**Ring**	A ring for hanging the teaching box
3	**Stop switch**	Locks and stops operation when this switch is pressed. The lock is released when it is turned to the right.
4	**Stop switch guard**	A guard for the stop switch
5	**Enable switch (Option)**	Prevents unintentional operation (unexpected operation) of the jog test function. Other functions such as data change are not covered.
6	**Key switch**	Switch for each input
7	**Cable**	Length: 3 meters
8	**Connector**	A connector connected to CN4 of the controller

Controller and Peripheral Devices/ Specific Product Precautions 1

Be sure to read before handling. Refer to the back cover for Safety Instructions. Refer to the operation manual for using the products. Please download it via our website. http://www.smcworld.com/

Design/Selection

⚠Warning

1. Be sure to apply the specified voltage.
Otherwise, malfunction and breakage may be caused. If the applied voltage is lower than the specified, it is possible that the load cannot be moved due to an internal voltage drop of the controller. Please check the operating voltage before use.

2. Do not operate the product beyond the specifications.
Otherwise, a fire, malfunction or actuator damage can result. Please check the specifications before use.

3. Install an emergency stop circuit outside of the enclosure.
Please install an emergency stop outside of the enclosure so that it can stop the system operation immediately and intercept the power supply.

4. In order to prevent damage due to the breakdown and the malfunction of the controller and its peripheral devices, a backup system should be established previously by giving a multiple-layered structure or a fail-safe design to the equipment, etc.

5. If a danger against the personnel is expected due to an abnormal heat generation, smoking, ignition, etc., of the controller and its peripheral devices, cut off the power supply for the product and the system immediately.

Handling

⚠Warning

1. Do not touch the inside of the controller and its peripheral devices.
It may cause an electric shock or damage to the controller.

2. Do not perform the operation or setting of the product with wet hands.
It may cause an electric shock.

3. Product with damage or the one lacking of any components should not be used.
It may cause an electric shock, fire, or injury.

4. Use only the specified combination between the electric actuator and controller.
It may cause damage to the actuator or the controller.

5. Be careful not to be caught or hit by the workpiece while the actuator is moving.
It may cause an injury.

6. Do not connect the power supply or power on the product before confirming the area to which the workpiece moves is safe.
The movement of the workpiece may cause an accident.

7. Do not touch the product when it is energized and for some time after power has been disconnected, as it is very hot.
It may lead to a burn due to the high temperature.

8. Check the voltage using a tester for more than 5 minutes after power-off in case of installation, wiring and maintenance.
It may cause an electric shock, fire, or injury.

Handling

⚠Warning

9. Static electricity may cause malfunction or break the controller. Do not touch the controller while power is supplied.
When touching the controller for maintenance, take sufficient measures to eliminate static electricity.

10. Do not use the product in an area where dust, powder dust, water, chemicals or oil is in the air.
It will cause failure or malfunction.

11. Do not use the product in an area where a magnetic field is generated.
It will cause failure or malfunction.

12. Do not install the product in the environment of flammable gas, explosive gas and corrosive gas.
It could lead to fire, explosion and corrosion.

13. Radiant heat from strong heat supplies such as a furnace, direct sunlight, etc., should not be applied to the product.
It will cause failure of the controller or its peripheral devices.

14. Do not use the product in an environment subject to a temperature cycle.
It will cause failure of the controller or its peripheral devices.

15. Do not use the product in a place where surges are generated.
When there are units that generate a large amount of surge around the product (e.g., solenoid type lifters, high frequency induction furnaces, motors, etc.), this may cause deterioration or damage to the product's internal circuit. Avoid supplies of surge generation and crossed lines.

16. Do not install the product in an environment under the effect of vibrations and impacts.
It will cause failure or malfunction.

17. When a surge generating load such as a relay or solenoid valve is directly driven, use a product that incorporates a surge absorption element.

Installation

⚠Warning

1. Install the controller and its peripheral devices on a fire-proof material.
A direct installation on or near a flammable material may cause fire.

2. Do not install the product in a place subject to vibrations and impacts.
It will cause failure or malfunction.

3. Do not mount the controller and its peripheral devices together with a large-sized electromagnetic contactor or no-fuse breaker, which generates vibration, on the same panel. Mount them on different panels, or keep the controller and its peripheral devices away from such a vibration supply.

4. Install the controller and its peripheral devices on a flat surface.
If the mounting surface is distorted or not flat, an unacceptable force may be added to the housing, etc., to cause troubles.

Controller and Peripheral Devices/ Specific Product Precautions 2

Be sure to read before handling. Refer to the back cover for Safety Instructions.
Refer to the operation manual for using the products.
Please download it via our website. http://www.smcworld.com/

Power Supply

⚠Caution

1. **Use a power supply that has low noise between lines and between power and ground.**
   In cases where noise is high, an isolation transformer should be used.
2. **The power supplies should be separated between the controller power and the I/O signal power and both of them do not use the power supply of "inrush current prevention type".**
   If the power supply is "inrush current prevention type", a voltage drop may be caused during the acceleration of the actuator.
3. **To prevent surges from lightning, an appropriate measure should be taken. Ground the surge absorber for lightning separately from the grounding of the controller and its peripheral devices.**

Grounding

⚠Warning

1. **Be sure to carry out grounding in order to ensure the noise tolerance.**
2. **Dedicated grounding should be used.**
   Grounding should be to a D-class ground. (Ground resistance of 100 Ω or less)
3. **Grounding should be performed near the controller and its peripheral devices to shorten the grounding distance.**
4. **In the unlikely event that malfunction is caused by ground, please disconnect the unit from ground.**

Maintenance

⚠Warning

1. **Perform a maintenance check periodically.**
   Confirm wiring and screws are not loose.
   Loose screws or wires may cause unintentional malfunction.
2. **Conduct an appropriate functional inspection after completing the maintenance.**
   At times where the equipment or machinery does not operate properly, conduct an emergency stop of the system. Otherwise, an unexpected malfunction may occur and it will become impossible to secure the safety. Conduct a test of the emergency stop in order to confirm the safety of the equipment.
3. **Do not disassemble, modify or repair the controller and its peripheral devices.**
4. **Do not put anything conductive or flammable inside of the controller.**
   It may cause a fire.
5. **Do not conduct an insulation resistance test and withstand voltage test on this product.**
6. **Ensure sufficient space for maintenance activities.**
   Design the system that allows required space for maintenance.

Related Products

Electric Grippers

CAT.ES100-77

2-Finger Type

Series ***LEHZ***

- **Compact and lightweight Various gripping forces**

Body size	Stroke/ both sides [mm]	Gripping force [N]	
		Basic	Compact
10	4	6 to 14	2 to 6
16	6		3 to 8
20	10	16 to 40	11 to 28
25	14		
32	22	52 to 130	—
40	30	84 to 210	—

Series ***LEHF***

- **Long stroke, can hold various types of work pieces.**

Body size	Stroke/ both sides [mm]	Gripping force [N]
10	16 (32)	3 to 7
20	24 (48)	11 to 28
32	32 (64)	48 to 120
40	40 (80)	72 to 180

( ): Long stroke

3-Finger Type

Series ***LEHS***

- **Can hold round work pieces.**

Body size	Stroke/ diameter [mm]	Gripping force [N]	
		Basic	Compact
10	4	2.2 to 5.5	1.4 to 3.5
20	6	9 to 22	7 to 17
32	8	36 to 90	—
40	12	52 to 130	—

Electric Slide Table

CAT.ES100-78

Series ***LES***

- **Compact, Space-saving**
  (61% reduction in volume compared to the SMC conventional products)
- **Reduced cycle time**
  Max. acceleration and deceleration: **5,000 mm/s²**
  Max. speed: **400 mm/s**
- **Positioning repeatability: ±0.05 mm**
  Positioning pattern points: 64 points
- **Mounting in 2 directions is available.**

Model	Stroke (mm)	Work load (kg)				Speed (mm/s)	Screw lead (mm)
		Step motor (Servo/24 VDC)		Servo motor (24 VDC)			
		Horizontal	Vertical	Horizontal	Vertical		
LESH8R	50, 75	2	0.5	2	0.5	10 to 200	4
		1	0.25	1	0.25	20 to 400	8
LESH16R	50, 100	6	2	5	2	10 to 200	5
		4	1	2.5	1	20 to 400	10
LESH25R	50, 100, 150	9	4	6	2.5	10 to 150	8
		6	2	4	1.5	20 to 400	16

Related Products

Electric Actuator/Rod Type

Series ***LEY***

- **Long stroke: Max. 500 mm (LEY32)**
- **Mounting variations**
  - Direct mounting: 3 directions
  - Bracket mounting: 3 types
- **Auto switch can be mounted.**
- **Speed control/Positioning: Max. 64 points**
- **Positioning and pushing control can be selected.**

  Possible to hold the actuator when pushing the rod to a workpiece, etc.

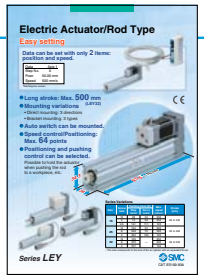

CAT.ES100-83A

Size	Screw lead	Pushing force [N]		Max. speed [mm/s]	Stroke [mm]
		Step motor	Servo motor		
16	10	38	30	500	50 to 300
	5	74	58	250	
	2.5	141	111	125	
25	12	122	35	500	50 to 400
	6	238	72	250	
	3	452	130	125	
32	16	189	—	500	50 to 500
	8	370		250	
	4	707		125	

SMC

⚠ Safety Instructions

These safety instructions are intended to prevent hazardous situations and/or equipment damage. These instructions indicate the level of potential hazard with the labels of **"Caution," "Warning"** or **"Danger."** They are all important notes for safety and must be followed in addition to International Standards (ISO/IEC)*1), and other safety regulations.

⚠ Caution: **Caution** indicates a hazard with a low level of risk which, if not avoided, could result in minor or moderate injury.

⚠ Warning: **Warning** indicates a hazard with a medium level of risk which, if not avoided, could result in death or serious injury.

⚠ Danger : **Danger** indicates a hazard with a high level of risk which, if not avoided, will result in death or serious injury.

*1) ISO 4414: Pneumatic fluid power – General rules relating to systems.
ISO 4413: Hydraulic fluid power – General rules relating to systems.
IEC 60204-1: Safety of machinery – Electrical equipment of machines. (Part 1: General requirements)
ISO 10218-1: Manipulating industrial robots - Safety.
etc.

⚠ Warning

1. **The compatibility of the product is the responsibility of the person who designs the equipment or decides its specifications.**
   Since the product specified here is used under various operating conditions, its compatibility with specific equipment must be decided by the person who designs the equipment or decides its specifications based on necessary analysis and test results. The expected performance and safety assurance of the equipment will be the responsibility of the person who has determined its compatibility with the product. This person should also continuously review all specifications of the product referring to its latest catalog information, with a view to giving due consideration to any possibility of equipment failure when configuring the equipment.
2. **Only personnel with appropriate training should operate machinery and equipment.**
   The product specified here may become unsafe if handled incorrectly. The assembly, operation and maintenance of machines or equipment including our products must be performed by an operator who is appropriately trained and experienced.
3. **Do not service or attempt to remove product and machinery/equipment until safety is confirmed.**
   1. The inspection and maintenance of machinery/equipment should only be performed after measures to prevent falling or runaway of the driven objects have been confirmed.
   2. When the product is to be removed, confirm that the safety measures as mentioned above are implemented and the power from any appropriate source is cut, and read and understand the specific product precautions of all relevant products carefully.
   3. Before machinery/equipment is restarted, take measures to prevent unexpected operation and malfunction.
4. **Contact SMC beforehand and take special consideration of safety measures if the product is to be used in any of the following conditions.**
   1. Conditions and environments outside of the given specifications, or use outdoors or in a place exposed to direct sunlight.
   2. Installation on equipment in conjunction with atomic energy, railways, air navigation, space, shipping, vehicles, military, medical treatment, combustion and recreation, or equipment in contact with food and beverages, emergency stop circuits, clutch and brake circuits in press applications, safety equipment or other applications unsuitable for the standard specifications described in the product catalog.
   3. An application which could have negative effects on people, property, or animals requiring special safety analysis.
   4. Use in an interlock circuit, which requires the provision of double interlock for possible failure by using a mechanical protective function, and periodical checks to confirm proper operation.

⚠ Caution

1. **The product is provided for use in manufacturing industries.**
   The product herein described is basically provided for peaceful use in manufacturing industries.
   If considering using the product in other industries, consult SMC beforehand and exchange specifications or a contract if necessary.
   If anything is unclear, contact your nearest sales branch.

Limited warranty and Disclaimer/ Compliance Requirements

The product used is subject to the following "Limited warranty and Disclaimer" and "Compliance Requirements".
Read and accept them before using the product.

Limited warranty and Disclaimer

1. The warranty period of the product is 1 year in service or 1.5 years after the product is delivered.*2)
   Also, the product may have specified durability, running distance or replacement parts. Please consult your nearest sales branch.
2. For any failure or damage reported within the warranty period which is clearly our responsibility, a replacement product or necessary parts will be provided.
   This limited warranty applies only to our product independently, and not to any other damage incurred due to the failure of the product.
3. Prior to using SMC products, please read and understand the warranty terms and disclaimers noted in the specified catalog for the particular products.

   ***2) Vacuum pads are excluded from this 1 year warranty.**
   A vacuum pad is a consumable part, so it is warranted for a year after it is delivered.
   Also, even within the warranty period, the wear of a product due to the use of the vacuum pad or failure due to the deterioration of rubber material are not covered by the limited warranty.

Compliance Requirements

1. The use of SMC products with production equipment for the manufacture of weapons of mass destruction (WMD) or any other weapon is strictly prohibited.
2. The exports of SMC products or technology from one country to another are governed by the relevant security laws and regulations of the countries involved in the transaction. Prior to the shipment of a SMC product to another country, assure that all local rules governing that export are known and followed.

⚠ Safety Instructions	Be sure to read "Handling Precautions for SMC Products" (M-E03-3) before using.

SMC Corporation

Akihabara UDX 15F,
4-14-1, Sotokanda, Chiyoda-ku, Tokyo 101-0021, JAPAN
Phone: 03-5207-8249 Fax: 03-5298-5362
URL http://www.smcworld.com

Specifications are subject to change without prior notice and any obligation on the part of the manufacturer.

D-DN 1st printing NZ printing NZ 6000SZ Printed in Japan.

This catalog is printed on recycled paper with concern for the global environment.